Illinois Tollway Base Sheet Revisions

Section M	Base Sheet Drawings	
	Drawing	**Modification Summary** **Effective: 03-1-2021**
	Roadway (RDY)-Series 400	
	M-RDY-400	**ROADWAY TYPICAL SECTIONS GROUP A**
		Inside shoulder cross slope reviesed from 4% to 3% for normal crown typicals.
		Subgrade layer added to all typical sections.
		Roadway Design Criteria Manual Section 2.4.9 referenced for all Rollover (Max.) areas.
		Note added to reference the Longitudinal Joint Sealant sheet M-RDY-415.
	M-RDY-401	**ROADWAY TYPICAL SECTIONS GROUP B**
		Subgrade layer added to all typical sections.
	M-RDY-404	**ROADWAY TYPICAL SECTIONS GROUP E**
		Revised R.O.W. dimension from 5' (MIN.) to 3' (MIN.).
		Revised a dimension leader.
	M-RDY-406	**ROADWAY TYPICAL SECTIONS GROUP G**
		Clarified flat area behind NAW wall measured from the back of the post
	M-RDY-407	**EARTHWORK SCHEDULE, SHEET 1,2 AND 3**
		Revised all earthwork tables.
		Added Non Special Waste Disposal Type 1 table.
	M-RDY-408	**APPROACH SLAB, MAINLINE, SHEETS 1, 2, 3, AND 5**
		Revised top transverse bars above shoulder to be hooked bar.
		Added a designer note to replace the top transverse hooked bars when the height of the barrier is 72".
	M-RDY-409	**APPROACH SLAB, RAMP, SHEETS 1, 2, 3, AND 5**
		Revised top transverse bars above shoulder to be hooked bar.
	M-RDY-410	**PRECAST APPROACH SLAB W/CIP TRANSITION SLAB, SHEET 1**
		Revised top transverse bars above shoulder to be hooked bar.
		Added a designer note to replace the top transverse hooked bars when the height of the barrier is 72".
		Revised top transverse bars spacing to 6".
		Revised bottom transverse bars to #8 @ 5".
		Revised bottom longitudinal bars spacing to 9" from 8".
	M-RDY-410	**PRECAST APPROACH SLAB W/CIP TRANSITION SLAB, SHEET 2**
		Added a designer note to provide requirements for precast panel width.
	M-RDY-410	**PRECAST APPROACH SLAB W/CIP TRANSITION SLAB, SHEET 3**
		Revised top transverse bars above shoulder to be hooked bar.
		Added a designer note to replace the top transverse hooked bars when the height of the barrier is 72".
	M-RDY-410	**PRECAST APPROACH SLAB W/CIP TRANSITION SLAB, SHEET 5**
		Revised top transverse bars above shoulder to be hooked bar.
		Added a designer note to replace the top transverse hooked bars when the height of the barrier is 72".
	M-RDY-410	**PRECAST APPROACH SLAB W/CIP TRANSITION SLAB, SHEET 7**
		Added hooked bar bending details .
		Added a designer note to update the barrier bars based on the barrier type.
	M-RDY-411	**EMERGENCY TURNAROUND, MEDIAN WIDTH < 35FT, SHEET 4**
		Revised inside shoulder cross slope to 3% for Sections F-F, G-G, and H-H
	M-RDY-412	**ROADWAY SUBGRADE SLOPES MEDIAN BARRIER**
		Roadway Design Criteria Manual Section 2.4.9 referenced for all Rollover (Max.) areas.
		Revised inside shoulder cross slope from 4% to 3% for the normal crown section.
	M-RDY-415	**LONGITUDINAL JOINT SEALANT**
		Added detail for Longitudinal Joint Sealant locations and Quantities.

New Sheet Retired Standard

℄ ILLINOIS TOLLWAY

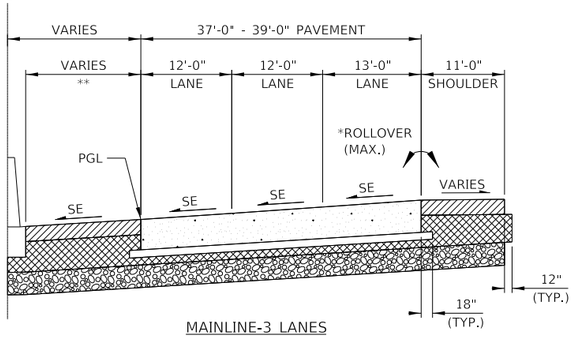

MAINLINE-3 LANES
SUPERELEVATION, LEFT

℄ ILLINOIS TOLLWAY

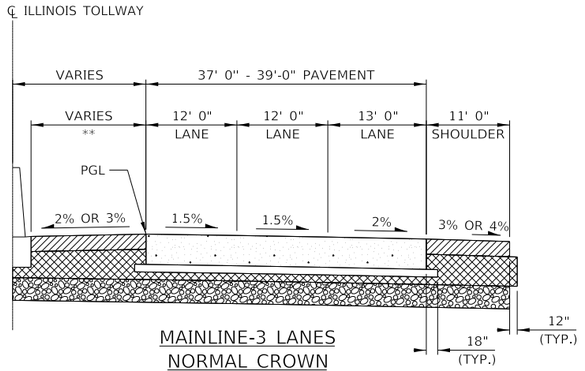

MAINLINE-3 LANES
NORMAL CROWN

℄ ILLINOIS TOLLWAY

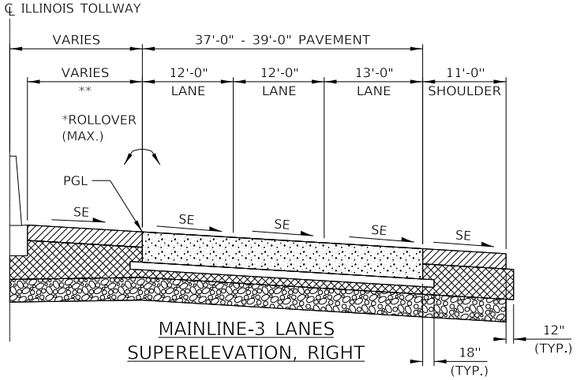

MAINLINE-3 LANES
SUPERELEVATION, RIGHT

℄ ILLINOIS TOLLWAY

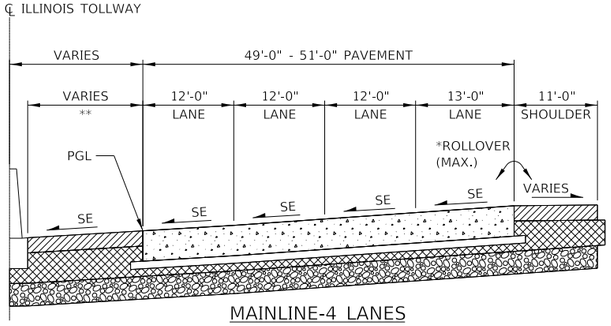

MAINLINE-4 LANES
SUPERELEVATION, LEFT

℄ ILLINOIS TOLLWAY

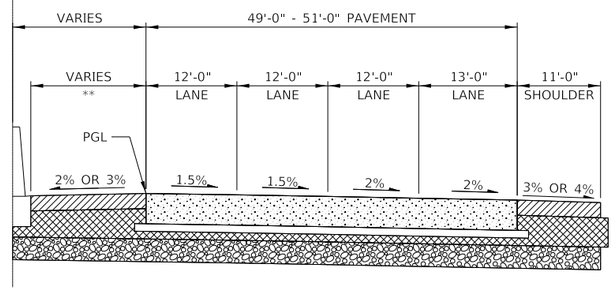

MAINLINE-4 LANES
NORMAL CROWN

℄ ILLINOIS TOLLWAY

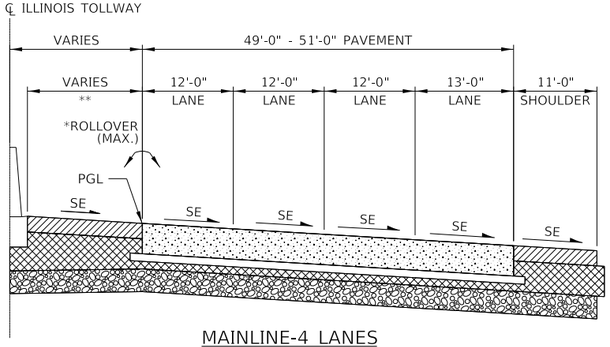

MAINLINE-4 LANES
SUPERELEVATION, RIGHT

℄ ILLINOIS TOLLWAY

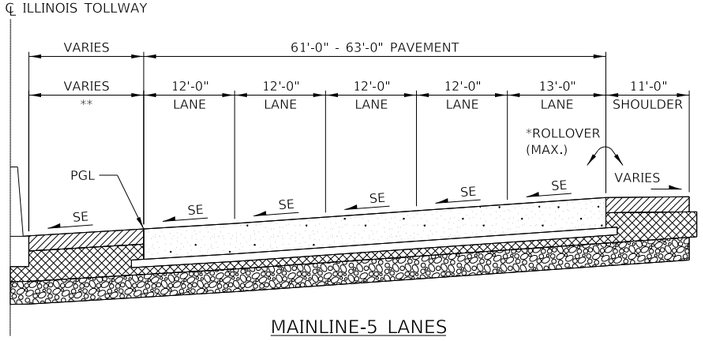

MAINLINE-5 LANES
SUPERELEVATION, LEFT

℄ ILLINOIS TOLLWAY

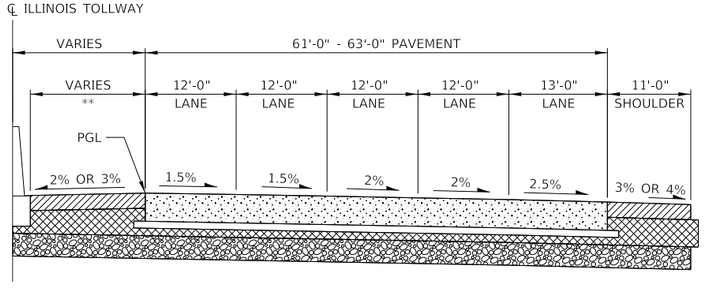

MAINLINE-5 LANES
NORMAL CROWN

℄ ILLINOIS TOLLWAY

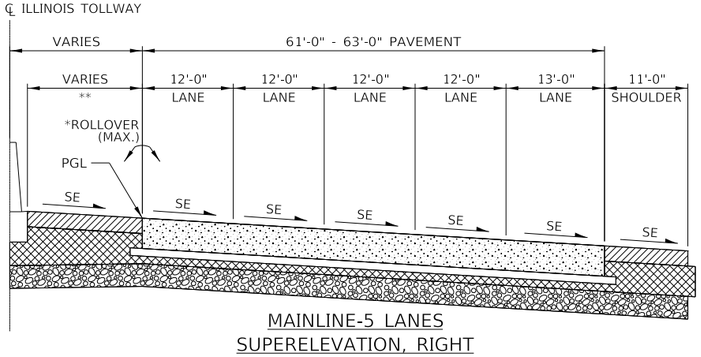

MAINLINE-5 LANES
SUPERELEVATION, RIGHT

NOTES:

REFERENCE ILLINOIS TOLLWAY STANDARD DRAWING B24, PIPE UNDERDRAIN, FOR PLACEMENT LOCATION.
REFERENCE ILLINOIS TOLLWAY BASE SHEET M-RDY-412, FOR BOTTOM OF SUBGRADE SLOPES.
REFERENCE ILLINOIS TOLLWAY BASE SHEET M-RDY-415, LONGITUDINAL JOINT SEALANT, FOR PLACEMENT.

*REFER TO ROADWAY DESIGN CRITERIA SECTION 2.4.9 FOR MAX ROLLOVER VALUES.
**REFER TO ROADWAY DESIGN CRITERIA FOR CROSS SLOPE CONDITIONS.

NOTE TO DESIGNER

THIS BASE SHEET SHOWS TYPICAL CONSTRUCTION BUT IT IS **NOT** A STANDARD DRAWING. IT REQUIRES COMPLETION BY THE DESIGNER PRIOR TO INSERTION INTO A CONTRACT. MICROSTATION FILES AND THE *"CADD STANDARDS MANUAL"* ARE AVAILABLE ON THE ILLINOIS TOLLWAY WEBSITE. THE DESIGNER SHALL ACCEPT THE RESPONSIBILITY OF THE DESIGN OF THIS SHEET UPON ITS COMPLETION AND INSERTION INTO A CONTRACT. ALL "NOTE TO DESIGNER" BOXES SHALL BE REMOVED BY THE DESIGNER PRIOR TO INSERTION OF THE SHEET INTO THE PLAN SET.

Illinois Tollway

ROADWAY TYPICAL SECTIONS GROUP A

VERSION:	STANDARD:	SHEET:
2021-03	M-RDY-400	1 OF 1

PLOT DRIVER: c:\bin\wp-us-pw.02\ps_brad.hyde\d0161565\pdf417tollway.ptf
PENTABLE: pw:\\wp-us-pw.bentley.com:wsp-us-pw-02\Documents\Illinois Tollway GEG (09776RR)\Standard Drawings and Base Sheets\Base Sheets\Section - M\400 RDY\M-RDY-400.DGN
PLOT DATE: 3/10/2021
PLOTTED BY: Brad Hyde
PLOT TIME: 4:51:37 PM
MODEL NAME: ROADWAY TYPICAL SECTIONS GROUP A SHEET
FILE NAME: pw:\\wp-us-pw.bentley.com:wsp-us-pw-02\Documents\Illinois Tollway GEG (09776RR)\Standard Drawings and Base Sheets\Base Sheets\Section - M\400 RDY\M-RDY-400.DGN
PLOT SCALE: 0.2 '' / in.
PAGE SIZE: 17x11 (in.)

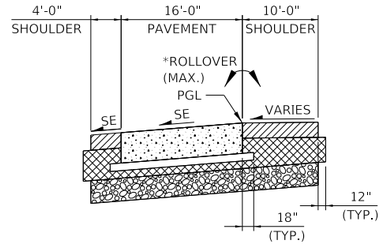

RAMP-1 LANE
SUPERELEVATION LEFT

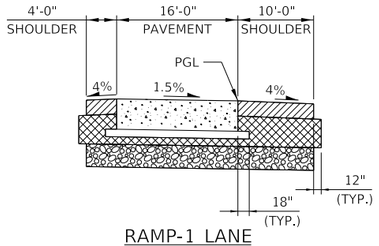

RAMP-1 LANE
NORMAL CROWN

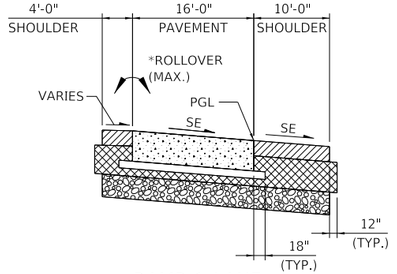

RAMP-1 LANE
SUPERELEVATION RIGHT

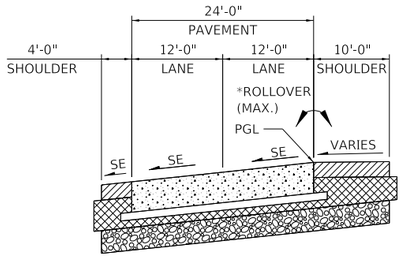

RAMP-2 LANES
SUPERELEVATION LEFT

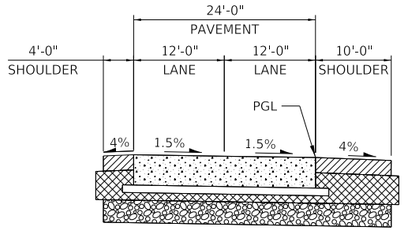

RAMP-2 LANES
NORMAL CROWN

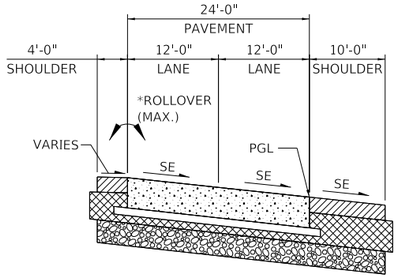

RAMP-2 LANES
SUPERELEVATION RIGHT

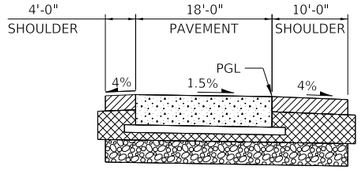

LOOP RAMP
NORMAL CROWN

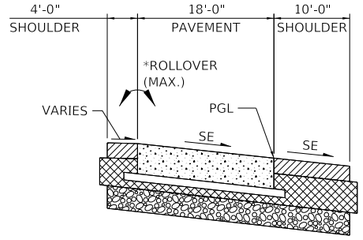

LOOP RAMP
SUPERELEVATION RIGHT

NOTES
REFERENCE ILLINOIS TOLLWAY STANDARD DRAWING B24, PIPE UNDERDRAIN, FOR PLACEMENT LOCATION.
REFERENCE ILLINOIS TOLLWAY BASE SHEET M-RDY-415, LONGITUDINAL JOINT SEALANT, FOR PLACEMENT.

*REFER TO ROADWAY DESIGN CRITERIA SECTION 2.4.9 FOR MAX ROLLOVER VALUES.

NOTE TO DESIGNER

THIS BASE SHEET SHOWS TYPICAL CONSTRUCTION BUT IT IS **NOT** A STANDARD DRAWING. IT REQUIRES COMPLETION BY THE DESIGNER PRIOR TO INSERTION INTO A CONTRACT. MICROSTATION FILES AND THE *"CADD STANDARDS MANUAL"* ARE AVAILABLE ON THE ILLINOIS TOLLWAY WEBSITE. THE DESIGNER SHALL ACCEPT THE RESPONSIBILITY OF THE DESIGN OF THIS SHEET UPON ITS COMPLETION AND INSERTION INTO A CONTRACT. ALL "NOTE TO DESIGNER" BOXES SHALL BE REMOVED BY THE DESIGNER PRIOR TO INSERTION OF THE SHEET INTO THE PLAN SET.

Illinois Tollway

ROADWAY TYPICAL SECTIONS GROUP B

VERSION:	STANDARD:	SHEET:
2021-03	M-RDY-401	1 OF 1

PLOT DRIVER: c:\bms\wsp-pb-us-pw-02\wsp_mac.rice\d0161165\pdf-ILTollway.pltcfg
PENTABLE: pw:\\wsp-us-pw.bentley.com:wsp-us-pw-02\Documents\Illinois Tollway GEG (99768R)\zz_Standards\Brad_Hoder\2019\ILTollwayCAD\Tables\Pen\BlackWhite-ILTollway.TBL
PLOT DATE: 3/11/2021 PLOT TIME: 2:18:53 PM
PLOTTED BY: RiceM
MODEL NAME: ROADWAY TYPICAL SECTIONS GROUP B - SHEET
FILE NAME: pw:\\wsp-us-pw.bentley.com:wsp-us-pw-02\Documents\Illinois Tollway GEG (99768R)\Standard Drawings and Base Sheets\Base Sheets\Section - M\400 RDY\M-RDY-401.DGN
PLOT SCALE: 0.2 ' / in. PAGE SIZE: 17x11 (in.)

RESERVED

M-RDY-402

Illinois Tollway

ROADWAY TYPICAL SECTIONS
GROUP C

DATE
11-1-2012

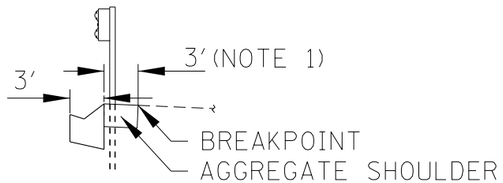

GUTTER, TYPE G-3
WITH GUARDRAIL

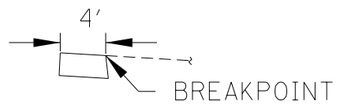

AGGREGATE
SHOULDER
(NOTE 2)

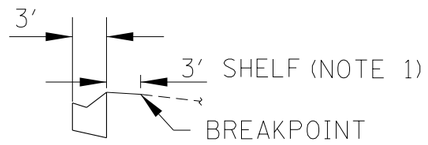

GUTTER, TYPE G-3

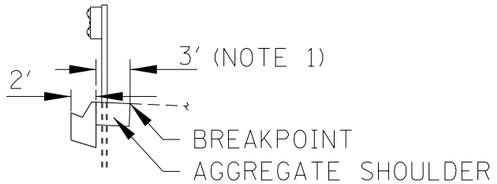

GUTTER, TYPE G-2
WITH GUARDRAIL

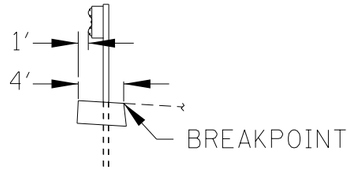

AGGREGATE SHOULDER
WITH GUARDRAIL
(NOTE 2)

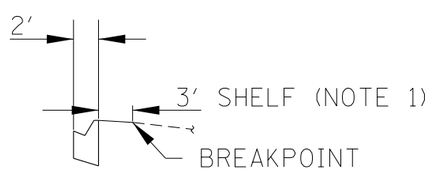

GUTTER, TYPE G-2

NOTES

1. SLOPE TOWARD GUTTER AT 6% WHEN IN CUT SECTION AND SLOPE AWAY FROM GUTTER AT 6% WHEN IN FILL SECTION.

2. AGGREGATE SHOULDER SLOPE SHALL NOT BE FLATTER THAN ADJACENT PAVED SHOULDER.

NOTE TO DESIGNER

THIS BASE SHEET SHOWS TYPICAL NEW CONSTRUCTION BUT IT IS NOT A STANDARD DRAWING. IT REQUIRES COMPLETION BY THE DESIGNER PRIOR TO INSERTION INTO A CONTRACT. MICROSTATION FILES AND THE "CADD STANDARDS MANUAL" ARE AVAILABLE ON THE ILLINOIS TOLLWAY WEBSITE. THE DESIGNER SHALL ACCEPT THE RESPONSIBILITY OF THE DESIGN OF THIS SHEET UPON ITS COMPLETION AND INSERTION INTO A CONTRACT. ALL "NOTE TO DESIGNER" BOXES SHALL BE REMOVED PRIOR TO INSERTION OF THE SHEET INTO THE PLAN SET.

M-RDY-403

Illinois Tollway

ROADWAY TYPICAL SECTIONS
GROUP D

DATE
3-01-2020

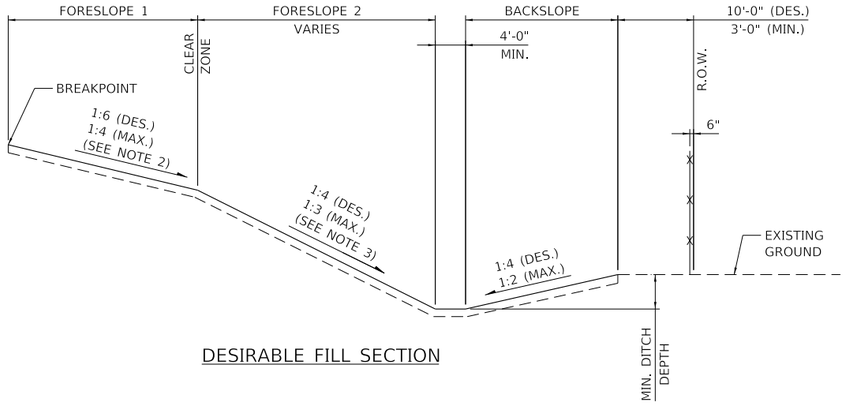

DESIRABLE FILL SECTION

SIDESLOPES HIERARCHY (IN ORDER OF PREFERENCE FOR FILL SECTION)			
FORESLOPE ***		DITCH (MIN.)	BACKSLOPE
1	2		
1:6 OR FLATTER	-	4'	1:4 OR FLATTER
1:6	1:4	4'	1:4
1:6	1:4	4'	1:3
1:6	1:3	4'	1:3
1:4	-	4'	1:3
1:4	-	4'	1:2
1:4	1:3	4'	1:3
1:6	1:3	4'	1:2
1:4	1:3	4'	1:2
1:6	1:2.5 **	4'	1:2
1:2.5 *	-	4'	1:3
1:2.5 *	-	4'	1:2
1:2.5 *	-	2'**	1:2

* DESIGN DEVIATION IF FILL HEIGHT IS LESS THAN 9'
** DESIGN DEVIATION IN ALL CASES
*** FORESLOPE 1 SHALL NOT BE 1:3

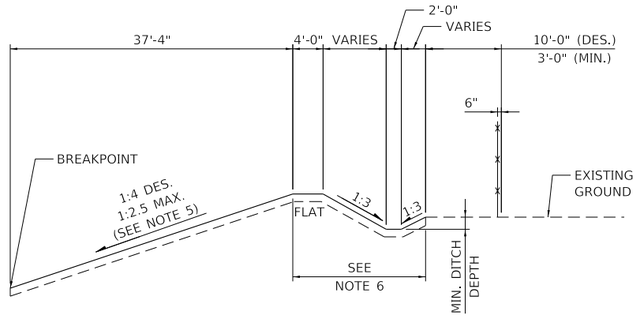

ACCEPTABLE CUT SECTION

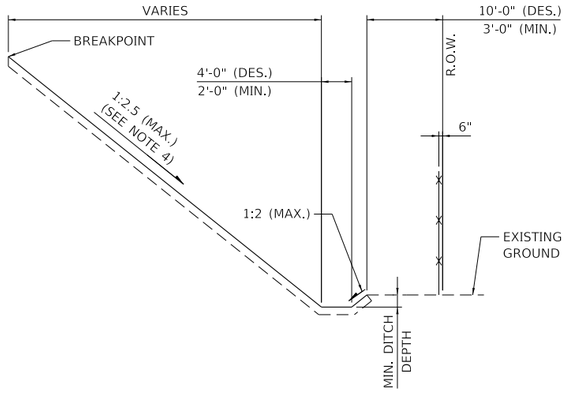

ACCEPTABLE FILL SECTION

FILL ≥ 9"
(CLEAR ZONE UNDEFINED)

NOTES:

1. ALL SLOPES ARE EXPRESSED AS UNITS OF VERTICAL DISPLACEMENTS TO UNITS OF HORIZONTAL DISPLACEMENTS (V:H).
2. SLOPE SHALL BE 1:6 OR FLATTER BEHIND GUTTER WITHOUT GUARDRAIL; IN ALL OTHER CASES THE MAXIMUM SLOPE SHALL BE 1:4. IF 1:4 SLOPE IS USED, INCREASE WIDTH BASED ON CLEAR ZONE REQUIREMENTS.
3. FORESLOPE 2 STEEPER THAN 1:3 USED FOR THE LOWER SLOPE ON A BARN-ROOF SECTION REQUIRES A DESIGN DEVIATION.
4. FORESLOPES STEEPER THAN 1:4 USED WHEN BARN-ROOF SECTION IS NOT USED AND WHEN FILL HEIGHT IS LESS THAN 9' REQUIRE A DESIGN DEVIATION.
5. BACKSLOPES STEEPER THAN 1:2.5 FROM THE SHOULDER POINT IN A CUT SECTION REQUIRE A DESIGN DEVIATION.
6. CAN BE OMITTED WHEN EXISTING GROUND SLOPES AWAY FROM R.O.W. LINE.
7. MINIMUM DITCH DEPTH SHALL FOLLOW DRAINAGE DESIGN MANUAL. DESIGNER SHALL MEET CRITERIA FOR DESIGN WATER SURFACE ON TABLE 6.1 AND ADEQUATELY DRAIN SUBBASE.

NOTE TO DESIGNER

THIS BASE SHEET SHOWS TYPICAL CONSTRUCTION BUT IT IS **NOT** A STANDARD DRAWING. IT REQUIRES COMPLETION BY THE DESIGNER PRIOR TO INSERTION INTO A CONTRACT. MICROSTATION FILES AND THE *"CADD STANDARDS MANUAL"* ARE AVAILABLE ON THE ILLINOIS TOLLWAY WEBSITE. THE DESIGNER SHALL ACCEPT THE RESPONSIBILITY OF THE DESIGN OF THIS SHEET UPON ITS COMPLETION AND INSERTION INTO A CONTRACT. ALL "NOTE TO DESIGNER" BOXES SHALL BE REMOVED BY THE DESIGNER PRIOR TO INSERTION OF THE SHEET INTO THE PLAN SET.

Illinois Tollway

ROADWAY TYPICAL SECTIONS GROUP E

VERSION:	STANDARD:	SHEET:
2021-03	M-RDY-404	1 OF 1

PLOT DRIVER: c:\bm_v\wsp-pw-02\bv_hrd_hoder\d0161565\ptf\HLTollway.ptf
PENTABLE: pw:\\wsp-us-pw.bentley.com:wsp-us-pw-02\Documents\Illinois Tollway GEG (997GRR)\Standard Drawings and Base Sheets\Brad_Hoder\2019\IlTollwayCAD\Tables\Penn\BlackWhite-IlTollway.TBL
PLOT DATE: 3/10/2021
PLOT TIME: 4:18:46 PM
PLOTTED BY: Brad Hoder
MODEL NAME: ROADWAY TYPICAL SECTIONS GROUP E - SHEET
FILE NAME: pw:\\wsp-us-pw.bentley.com:wsp-us-pw-02\Documents\Illinois Tollway GEG (997GRR)\Standard Drawings and Base Sheets\Section - M\M00 RDY\M-RDY-404.DGN
PLOT SCALE: 0.1667 ' / in.
PAGE SIZE: 17x11 (in.)

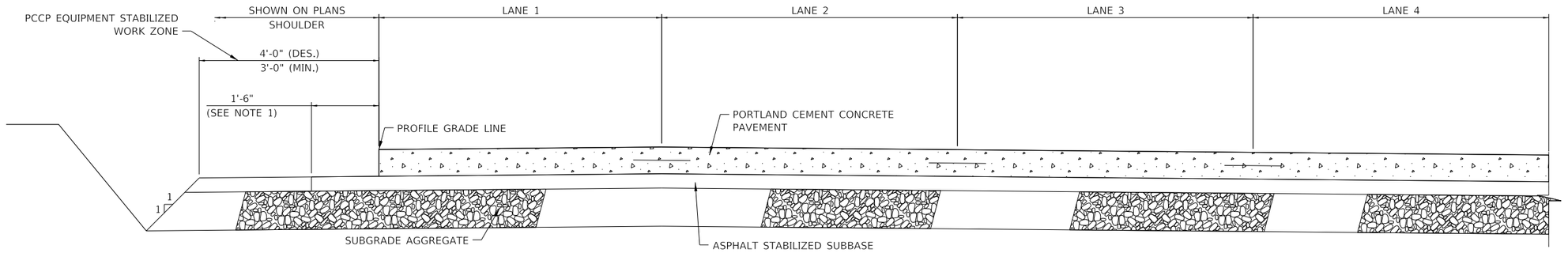

PAVEMENT CROSS - SECTION REQUIREMENTS
FOR PAVING OPERATIONS

GENERAL NOTES:

1. THE 1'-6" WIDE ASPHALT STABILIZED SUBBASE MAY BE REDUCED TO 1'-0" WHEN PAVING EQUIPMENT UTILIZED FOR CONSTRUCTION OF THE PCCP PAVEMENT WILL ALLOW.

2. THE STABILIZED WORK ZONE SHOULD ACCOUNT FOR THE PAVER TRACK AND SHOULD BE NOTED IN THE PLANS IF MINIMUMS ARE NOT MET.

3. STABILIZED WORK ZONE MAY OR MAY NOT BE CONTINUOUS TO THE ASPHALT STABILIZED BASE. ALTERNATIVES SHOULD BE INVESTIGATED TO DETERMINE THE BEST LOCATION.

NOTE TO DESIGNER

THIS BASE SHEET SHOWS TYPICAL CONSTRUCTION BUT IT IS **NOT** A STANDARD DRAWING. IT REQUIRES COMPLETION BY THE DESIGNER PRIOR TO INSERTION INTO A CONTRACT. MICROSTATION FILES AND THE *"CADD STANDARDS MANUAL"* ARE AVAILABLE ON THE ILLINOIS TOLLWAY WEBSITE. THE DESIGNER SHALL ACCEPT THE RESPONSIBILITY OF THE DESIGN OF THIS SHEET UPON ITS COMPLETION AND INSERTION INTO A CONTRACT. ALL "NOTE TO DESIGNER" BOXES SHALL BE REMOVED BY THE DESIGNER PRIOR TO INSERTION OF THE SHEET INTO THE PLAN SET.

Illinois Tollway

ROADWAY TYPICAL SECTIONS GROUP F

VERSION:	STANDARD:	SHEET:
2020-03	M-RDY-405	1 OF 1

PLOT DRIVER: c:\bms\wsp-pb-us-pw-02\as_brad.hoder\d0161165\pdf-ILTollway.pltcfg
PENTABLE: pw:\\wsp-us-pw.bentley.com:wsp-us-pw-02\Documents\Illinois Tollway GEG (9976RR)\zz_Standards\Brad_Hoder\2019\ILTollwayCAD\Tables\Pen\BlackWhite-ILTollway.TBL
PLOT DATE: 3/10/2021 PLOT TIME: 4:20:16 PM
PLOTTED BY: Brad
MODEL NAME: ROADWAY TYPICAL SECTIONS GROUP F - SHEET
FILE NAME: pw:\\wsp-us-pw.bentley.com:wsp-us-pw-02\Documents\Illinois Tollway GEG (9976RR)\Standard Drawings and Base Sheets\Base Sheets\Section - M\400 RDY\M-RDY-405.DGN
PLOT SCALE: 0.1667 ' / in. PAGE SIZE: 17x11 (in.)

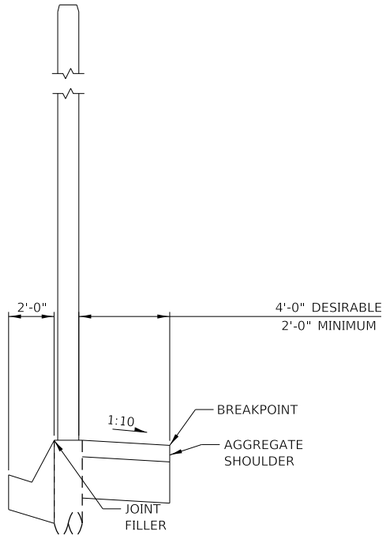

GUTTER, TYPE G-2
W/CRASHWORTHY GROUND MOUNTED
NOISE ABATEMENT WALL

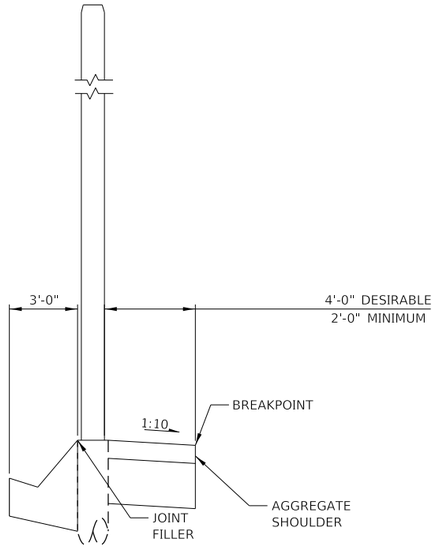

GUTTER, TYPE G-3
W/CRASHWORTHY GROUND MOUNTED
NOISE ABATEMENT WALL

NOTE TO DESIGNER

THIS BASE SHEET SHOWS TYPICAL CONSTRUCTION BUT IT IS **NOT** A STANDARD DRAWING. IT REQUIRES COMPLETION BY THE DESIGNER PRIOR TO INSERTION INTO A CONTRACT. MICROSTATION FILES AND THE *"CADD STANDARDS MANUAL"* ARE AVAILABLE ON THE ILLINOIS TOLLWAY WEBSITE. THE DESIGNER SHALL ACCEPT THE RESPONSIBILITY OF THE DESIGN OF THIS SHEET UPON ITS COMPLETION AND INSERTION INTO A CONTRACT. ALL "NOTE TO DESIGNER" BOXES SHALL BE REMOVED BY THE DESIGNER PRIOR TO INSERTION OF THE SHEET INTO THE PLAN SET.

NOTE:

ALL SLOPES ARE EXPRESSED AS UNITS OF VERTICAL DISPLACEMENT TO UNITS OF HORIZONTAL DISPLACEMENT (V:H).

Illinois Tollway

ROADWAY TYPICAL SECTIONS GROUP G

VERSION:	STANDARD:	SHEET:
2021-03	M-RDY-406	1 OF 1

PLOT DRIVER: c:\bms\wsp-pb-us-pw-02\as_brad.hoder\d0161165\pdf-ILTollway.pltcfg
PENTABLE: pw:\\wsp-us-pw.bentley.com:wsp-us-pw-02\Documents\Illinois Tollway GEG (9976RR)\zz_Standards\Brad_Hoder\2019\ILTollwayCAD\Tables\Pen\BlackWhite-ILTollway.TBL
PLOT DATE: 3/10/2021 PLOT TIME: 4:24:31 PM
PLOTTED BY: Brad
MODEL NAME: ROADWAY TYPICAL SECTIONS GROUP G - SHEET
FILE NAME: pw:\\wsp-us-pw.bentley.com:wsp-us-pw-02\Documents\Illinois Tollway GEG (9976RR)\Standard Drawings and Base Sheets\Base Sheets\Section - M\400 RDY\M-RDY-406.DGN
PLOT SCALE: 0.1667 ' / in. PAGE SIZE: 17x11 (in.)

EARTHWORK SCHEDULE OF QUANTITIES								
EARTHWORK VOLUMES (CUYD)								
LOCATION	A	B	C	D	E	F (SEE NOTE 3)	G	H (SEE NOTE 3)
	EARTH EXCAVATION	ROCK EXCAVATION	UNSUITABLE MATERIAL	STRUCTURE EXCAVATION	UNSUITABLE MATERIAL FOR STRUCTURES	SUITABLE EXCAVATION (adjusted for shrinkage %)	EMBANKMENT	EARTHWORK BALANCE EXCESS (+) or SHORTAGE (-)
	20200100	20200200	20201200	50200100	50200450			
STAGE 1								
400+00 to 500+00								
500+00 to 600+00								
RAMP A RAMP C								
STAGE 1 TOTAL								
STAGE 2								
400+00 to 500+00								
500+00 to 600+00								
RAMP A								
RAMP C								
STAGE 2 TOTAL								
TOTAL								

EARTHWORK SCHEDULE OF QUANTITIES													
ENVIRONMENTAL CLASSIFICATION (CUYD)													
LOCATION	I1	J1	K1	L1	M1	N1	O1	P1	Q1	R1	S1	T1	U1
	C: SOILS APPROVED FOR REUSE				B: SOILS APPROVED WITH RESTRICTIONS				A: SOILS NOT APPROVED FOR REUSE				HAZARDOUS WASTE
	TYPE 1	TYPE 2	TYPE 3	TYPE 4	TYPE 1	TYPE 2	TYPE 3	TYPE 4	TYPE 1	TYPE 2	TYPE 3	TYPE 4	JT669020
STAGE 1													
400+00 to 500+00													
500+00 to 600+00													
RAMP A													
RAMP C													
STAGE 1 TOTAL													
STAGE 2													
400+00 to 500+00													
500+00 to 600+00													
RAMP A													
RAMP C													
STAGE 2 TOTAL													
TOTAL													

NOTES:

SHRINKAGE

1. SS IS THE SOIL SHRINKAGE MULTIPLIER, WHICH IS DETERMINED TO BE _%.

CLASSIFICATION

2. "SOILS APPROVED WITH RESTRICTION" CAN BE REUSED IN THE FOLLOWING MUNICIPALITIES WITH IEPA APPROVED GROUNDWATER ORDINANCES (DSE TO LIST MUNICIPALITIES).

CALCULATIONS

3. SUITABLE EXCAVATION, F, REPRESENTS SUITABLE EXCAVATED MATERIAL VOLUMES ADJUSTED FOR SHRINKAGE AND ONLY INCLUDES EARTHWORK VOLUMES ASSOCIATED WITH EARTH EXCAVATION, A; ROCK EXCAVATION, B; AND STRUCTURE EXCAVATION, D.

F=(A+D-(Q1+R1+S1+T1))*SS+B WITH IEPA APPROVED GROUNDWATER ORDINANCE; F=(A+D-(Q1+R1+S1+T1)-(M1+N1+O1+P1))*SS + B WITHOUT IEPA APPROVED GROUNDWATER ORDINANCE

W=V-(Q2+R2+S2+T2) WITH IEPA APPROVED GROUNDWATER ORDINANCE; W=V-(Q2+R2+S2+T2)-(M2+N2+O2+P2) WITHOUT IEPA APPROVED GROUNDWATER ORDINANCE

H=F-G

4. INCIDENTAL EXCAVATION IS OUTLINED IN A SEPARATE TABLE WHICH IDENTIFIES ENVIRONMENTAL SOIL CLASSIFICATION AND IS NOT CONSIDERED IN THE CALCULATION FOR SUITABLE EXCAVATION. THIS IS FOR INFORMATION ONLY EXCEPT FOR QUANTITIES OF TYPE 1 SOIL DISPOSAL. PERFORMANCE BASED RETAINING WALLS EXCAVATION IS INCLUDED AS INCIDENTAL TO THE RETAINING WALL AND ASSUMED AS MSE WALLS UNLESS OTHERWISE STATED BY THE DESIGNER. QUANTITIES MAY BE ADJUSTED BASED ON WALL DESIGN.

DISPOSAL

5. "SOILS NOT APPROVED" SHALL NOT BE REUSED ON THE ILLINOIS TOLLWAY ROW AND SHALL BE DISPOSED OF AS NON-SPECIAL WASTE, DISPOSAL TYPE 1 (TYPE 1) OR AS ASSOCIATED WORK PAY ITEM (TYPES 2 THROUGH TYPE 4) OR INCLUDED IN THE COST OF THE ASSOCIATED WORK PAY ITEM.

6. "SOILS APPROVED WITH RESTRICTION" THAT CANNOT BE REUSED WITHIN THE PROJECT MUST BE REMOVED AS EITHER NON-SPECIAL WASTE DISPOSAL, TYPE 1, OR EXCAVATION PAY ITEM (TYPES 2 THROUGH TYPE 4) OR INCLUDED IN THE COST OF THE ASSOCIATED WORK PAY ITEM.

7. WHEN THERE IS EXCESS SOIL APPROVED FOR REUSE OR APPROVED FOR REUSE WITH RESTRICTION, THE CONTRACTOR SHALL FIRST REUSE ENVIRONMENTAL SOILS TYPE 1 TO MINIMIZE THE VOLUME OF MATERIAL DISPOSED AT A NON-SPECIAL WASTE DISPOSAL FACILITY.

NOTES TO DESIGNER

SHRINKAGE FACTOR

1. SHRINKAGE FACTOR (SF) SHALL BE DETERMINED BY THE DESIGNER THROUGH GEOTECHNICAL INVESTIGATION. TOPSOIL SHRINKAGE FACTOR IS 0%.

2. SS IS THE SHRINKAGE MULTIPLIER FOR SOIL, SS=(1-SF)

CLASSIFICATION

3. ENVIRONMENTAL SOIL TYPES COLUMNS IDENTIFICATION
a. COLUMN U IS HAZARDOUS WASTE
b. COLUMNS I THROUGH L – TYPE 1 THROUGH TYPE 4 APPROVED
c. COLUMNS M THROUGH P - TYPE 1 THROUGH TYPE 4 APPROVED WITH RESTRICTIONS
d. COLUMNS Q THROUGH T - TYPE 1 THROUGH TYPE 4 NOT APPROVED

FOR COLUMN IDENTIFICATION FOR ENVIRONMENTAL TYPES USE SUFFIX 1 FOR EARTHWORK SCHEDULE TABLE (I1 THROUGH U1), SUFFIX 2 FOR TOPSOIL TABLE (I2 THROUGH U2), SUFFIX 3 FOR INCIDENTAL TABLE (I3 THROUGH U3) AND SO ON.

4. FOR SOILS "NOT APPROVED" TYPE 2, TYPE 3, TYPE 4 AND "APPROVED WITH RESTRICTION" TYPE 2, TYPE 3, AND TYPE 4 THAT ARE IDENTIFIED ON YOUR CONTRACT, THEY SHOULD REMAIN IN THE SCHEDULE PROVIDED. THESE SOIL COLUMNS CAN BE OMITTED IF NOT IDENTIFIED ON THE PROJECT.

5. KEEP ALL EARTHWORK VOLUME COLUMNS (A THROUGH H) ON BASE SHEET FOR CONTRACT PLANS. REMOVE ENVIRONMENTAL CLASSIFICATION COLUMNS ON BASE SHEET IF THERE IS NONE PRESENT OF THAT TYPE ON THE CONTRACT.

CALCULATIONS

6. PLEASE NOTE THAT THE CALCULATIONS GUIDANCE PROVIDED IN THIS SECTION AND THE NON SPECIAL WASTE TABLES MAY NEED TO BE MODIFIED BASED ON VARIOUS TYPES OF EXCAVATION THAT MAY BE ENCOUNTERED ON YOUR CONTRACT (SUCH AS EXCAVATION OF EXISTING RETAINING WALLS, BENCHING, BALLAST, SUBBALLAST.....).

7. I1 THROUGH T1 SHOULD EQUAL TO A+C+D; COLUMNS I2 THROUGH T2 SHOULD EQUAL TO V; AND COLUMNS I3 THROUGH T3 SHOULD EQUAL TO Z+AA+BB.

8. WITHIN EARTHWORK SCHEDULE OF QUANTITY, ALL SOILS NOT APPROVED SHALL BE SUBTRACTED FROM THE CALCULATION OF SUITABLE EXCAVATION (F). WITHIN THE TOPSOIL SCHEDULE OF QUANTITY ALL SOILS NOT APPROVED SHALL BE SUBTRACTED FROM TOPSOIL STRIPPING (V).

9. MATERIAL APPROVED WITH RESTRICTIONS CAN ONLY BE USED IN MUNICIPALITIES WITH IEPA APPROVED GROUNDWATER ORDINANCE. IN MUNICIPALITIES WITHOUT IEPA APPROVED GROUNDWATER ORDINANCE, WITHIN EARTHWORK SCHEDULE OF QUANTITIES, ALL SOILS APPROVED WITH RESTRICTIONS SHALL BE SUBTRACTED FROM THE CALCULATION OF SUITABLE EXCAVATION (F). IN MUNICIPALITIES WITHOUT IEPA APPROVED GROUNDWATER ORDINANCE, WITHIN THE TOPSOIL SCHEDULE OF QUANTITY ALL SOILS APPROVED WITH RESTRICTIONS SHALL BE SUBTRACTED FROM THE TOPSOIL STRIPPING (V).

10. F=(A+D-(Q1+R1+S1+T1))*SS+B WITH IEPA APPROVED GROUNDWATER ORDINANCE;
F=(A+D-(Q1+R1+S1+T1)-(M1+N1+O1+P1))*SS + B WITHOUT IEPA APPROVED GROUNDWATER ORDINANCE

W=V-(Q2+R2+S2+T2) WITH IEPA APPROVED GROUNDWATER ORDINANCE;
W=V-(Q2+R2+S2+T2)-(M2+N2+O2+P2) WITHOUT IEPA APPROVED GROUNDWATER ORDINANCE

11. NON-SPECIAL WASTE DISPOSAL, TYPE 1 CALCULATION MAY BE MODIFIED TO INCLUDE TYPE 1 SOIL APPROVED FOR REUSE DEPENDING ON CONTRACT STAGING. SEE NSW CALCULATIONS IN TABULAR FORM.

DISPOSAL

12. SOILS CLASSIFIED AS TYPE 1 THAT ARE NOT REUSED WITHIN THE PROJECT ARE DISPOSED OF AND PAID FOR AS NON-SPECIAL WASTE, TYPE 1. SOILS CLASSIFIED AS TYPE 2 THROUGH TYPE 4 THAT ARE NOT REUSED WITHIN THE PROJECT ARE DISPOSED OF AND PAID FOR AS EARTH EXCAVATION, UNSUITABLE MATERIAL, STRUCTURE EXCAVATION OR INCLUDED IN THE ASSOCIATED WORK ITEM.

13. ANY UNSUITABLE (GEOTECHNICALLY) TYPE 1 MATERIAL IS DISPOSED OF AS NON-SPECIAL WASTE, TYPE1.

PAY ITEMS

14. KEEP ALL THE COLUMNS AND ROWS WITH PAY ITEMS. REPLACE ANY PAY ITEM NUMBERS SHOWN IN TABLES "NOT USED" IF THE PAY ITEM IS NOT INCLUDED IN THE CONTRACT. THE LOCATION WHERE THIS INSTANCE COULD OCCUR IS 1) COLUMN TITLES AND 2) BILL OF MATERIAL SUMMARY TABLE ROWS (I.E. ROCK EXCAVATION).

15. IF YOUR CONTRACT HAS MATERIAL SHOWN ON THE EARTHWORK SCHEDULE OF INCIDENTAL QUANTITIES TO BE USED FOR EMBANKMENT, THE VOLUME OF MATERIAL USED SHALL BE PAID AS FURNISHED EXCAVATION (20400800) OR FURNISHED EXCAVATION, SPECIAL (JI204005). THIS SHOULD BE EVALUATED ON A PROJECT SPECIFIC BASIS.

16. DSE TO COMPLETE NOTES 1 & 2.

NOTES TO DESIGNER

THIS BASE SHEET SHOWS TYPICAL NEW CONSTRUCTIION BUT IT IS NOT A STANDARD DRAWING. IT REQUIRES COMPLETION BY THE DESIGNER PRIOR TO INSERTION INTO A CONTRACT. MICROSTATION FILES ARE AVAILABLE ON THE CTS PROJECTWISE DATASOURCE IN THE 200 SERIES FOLDER 15 UNDER EARTHWORK. THE DESIGNER SHALL ACCEPT THE RESPONSIBILITY OF THE DESIGN OF THIS SHEET UPON ITS COMPLETEION AND INSERTION INTO A CONTRACT. ALL "NOT TO DESIGNER" BOXES SHALL BE REMOVED PRIOR TO INSERTION OF THE SHEET INTO THE PLAN SET.

Illinois Tollway

EARTHWORK SCHEDULE

VERSION:	STANDARD:	SHEET:
2021-03	M-RDY-407	1 OF 4

PLOT DRIVER: c:\bin\wsp-pb-us-pw-02\wsp_mac.rtx\d0161651\pdf-ILTollway.pltcfg
PENTABLE: pw:\\wsp-us-pw.bentley.com:wsp-us-pw-02\Documents\Illinois Tollway GEG (09768R)\Standard Drawings and Base Sheets\Base Sheets\Brad_Hoder\2019\ILTollway\CADTables\Pen\BlackWhite-ILTollway.TBL
PLOT DATE: 5/11/2021 PLOT TIME: 1:06:37 PM
PLOTTED BY: Brad Hoder
MODEL NAME: EARTHWORK SCHEDULE
FILE NAME: pw:\\wsp-us-pw.bentley.com:wsp-us-pw-02\Documents\Illinois Tollway GEG (09768R)\Standard Drawings and Base Sheets\Base Sheets\Section - MM400 RDY\M-RDY-407.dgn
PLOT SCALE: 0.1667 ' / in. PAGE SIZE: 17x11 (in.)

EARTHWORK SCHEDULE OF TOPSOIL QUANTITIES

LOCATION	EARTHWORK VOLUMES (CUYD)				ENVIRONMENTAL CLASSIFICATION (CUYD)												
	V	W (SEE NOTE 3, SHEET 1)	X	Y	I2	J2	K2	L2	M2	N2	O2	P2	Q2	R2	S2	T2	U2
	TOPSOIL STRIPPING	SUITABLE TOPSOIL	TOPSOIL PLACEMENT	TOPSOIL BALANCE Excess (+) or Shortage (-)	C: SOILS APPROVED FOR REUSE				B: SOILS APPROVED WITH RESTRICTIONS				A: SOILS NOT APPROVED FOR REUSE				HAZARDOUS WASTE
					TYPE 1	TYPE 2	TYPE 3	TYPE 4	TYPE 1	TYPE 2	TYPE 3	TYPE 4	TYPE 1	TYPE 2	TYPE 3	TYPE 4	JT669020
STAGE 1																	
400+00 to 500+00																	
500+00 to 600+00																	
RAMP A																	
RAMP C																	
STAGE 1 TOTAL																	
STAGE 2																	
400+00 to 500+00																	
500+00 to 600+00																	
RAMP A																	
RAMP C																	
STAGE 2 TOTAL																	
TOTAL																	

EARTHWORK SCHEDULE OF INCIDENTAL QUANTITIES

LOCATION	EARTHWORK VOLUMES (CUYD)				ENVIRONMENTAL CLASSIFICATION (CUYD)												
	Z	AA	BB	CC	I3	J3	K3	L3	M3	N3	O3	P3	Q3	R3	S3	T3	U3
	STORM SEWER TRENCH	ITS EXCAVATION	INCIDENTAL EXCAVATION (FILL IN TYPE)	INCIDENTAL EXCAVATION (FILL IN TYPE)	C: SOILS APPROVED FOR REUSE				B: SOILS APPROVED WITH RESTRICTIONS				A: SOILS NOT APPROVED FOR REUSE				HAZARDOUS WASTE
					TYPE 1	TYPE 2*	TYPE 3*	TYPE 4*	TYPE 1	TYPE 2	TYPE 3	TYPE 4	TYPE 1	TYPE 2	TYPE 3	TYPE 4	JT669020
STAGE 1																	
400+00 to 500+00																	
500+00 to 600+00																	
RAMP A																	
RAMP C																	
STAGE 1 TOTAL																	
STAGE 2																	
400+00 to 500+00																	
500+00 to 600+00																	
RAMP A																	
RAMP C																	
STAGE 2 TOTAL																	
TOTAL																	

*THIS EXCAVATION AND DISPOSAL IS NOT PAID FOR SEPARATELY BUT INCLUDED IN THE COST OF THE ASSOCIATED WORK ITEM.

EARTHWORK SCHEDULE OF PERFORMANCE BASED RETAINING WALLS QUANTITIES

LOCATION	EARTHWORK VOLUMES (CUYD)	ENVIRONMENTAL CLASSIFICATION (CUYD)												
	DD	I4	J4	K4	L4	M4	N4	O4	P4	Q4	R4	S4	T4	U4
	RETAINING WALL EXCAVATION*	C: SOILS APPROVED FOR REUSE				B: SOILS APPROVED WITH RESTRICTIONS				A: SOILS NOT APPROVED FOR REUSE				HAZARDOUS WASTE
		TYPE 1**	TYPE 2	TYPE 3	TYPE 4	TYPE 1**	TYPE 2	TYPE 3	TYPE 4	TYPE 1**	TYPE 2	TYPE 3	TYPE 4	JT669020
STAGE 1														
400+00 to 500+00														
500+00 to 600+00														
RAMP A														
RAMP C														
STAGE 1 TOTAL														
STAGE 2														
400+00 to 500+00														
500+00 to 600+00														
RAMP A														
RAMP C														
STAGE 2 TOTAL														
TOTAL														

*EXCAVATION FOR PERFORMANCE BASED RETAINING WALL IS NOT PAID FOR SEPARATELY BUT INCLUDED IN THE COST OF THE WALL. (SEE STRUCTURAL EX FOR OTHER WALLS UNLESS OTHERWISE SPECIFIED)

**SOIL FOR PERFORMANCE BASED RETAINING WALLS THAT CANNOT BE REUSED AND CLASSIFIED AS TYPE 1 SHALL BE PAID AS NON-SPECIAL WASTE DISPOSAL, TYPE 1.

BILL OF MATERIAL SUMMARY TABLE

PAY ITEM NO.	DESIGNATION	STAGE 1	STAGE 2	STAGE 3	STAGE 4	STAGE 5	TOTAL	UNITS	NOTES
20200100	EARTH EXCAVATION							CUYD	COLUMN A TOTAL, SEE SHEET 1
20200200	ROCK EXCAVATION							CUYD	COLUMN B TOTAL, SEE SHEET 1
20400800	FURNISHED EXCAVATION							CUYD	WHEN H<0 THEN H, ELSE 0
20201200	REMOVAL AND DISPOSAL OF UNSUITABLE MATERIAL							CUYD	COLUMN C TOTAL, SEE SHEET 1
50200100	STRUCTURE EXCAVATION							CUYD	COLUMN D TOTAL, SEE SHEET 1
JI211110	TOPSOIL EXCAVATION AND PLACEMENT							CUYD	WHEN X<W, THEN X OR WHEN X>W, THEN W
JI211112	TOPSOIL EXCAVATION AND DISPOSAL							CUYD	W-X
JI211126	TOPSOIL FURNISH AND PLACE, 6"							SQYD	WHEN X>W, THEN (X-W)/THICKNESS IN YARDS
JT202009	NON-SPECIAL WASTE DISPOSAL, TYPE 1							CUYD	COLUMN 11 TOTAL, SEE NSW DISPOSAL, TYPE 1 SHEET
JT669020	HAZARDOUS WASTE DISPOSAL							CUYD	U1+U2+U3+U4

Illinois Tollway

EARTHWORK SCHEDULE

VERSION:	STANDARD:	SHEET:
2021-03	M-RDY-407	2 OF 4

PLOT DRIVER: c:\bin\wsp-pb-us-pw-02\wsp_ _mac.rtx\d0161565\pdf.tLTollway.pltcfg
PENTABLE: pw:\\wsp-us-pw.bentley.com:wsp-us-pw-02\Documents\Illinois Tollway GEG (09768R)\tz_Standards\Brad_Hoder\2019\LTollway\CADTables\PenBlackWhite-ILTollway.TBL
PLOT DATE: 3/11/2021 PLOT TIME: 1:22:05 PM
PLOTTED BY: Richard Hoder
MODEL NAME: EARTHWORK SCHEDULE 2
FILE NAME: pw:\\wsp-us-pw.bentley.com:wsp-us-pw-02\Documents\Illinois Tollway GEG (09768R)\Standard Drawings and Base Sheets\Base Sheets\Section - M\400 RDY\M-RDY-407.dgn
PLOT SCALE: 0.1667 ' / in. PAGE SIZE: 17x11 (in.)

NON SPECIAL WASTE (NSW) DISPOSAL, TYPE 1											
LOCATION	SEE STEP 1				SEE STEP 2				SEE STEP 3		
	WITH IEPA APPROVED GROUNDWATER ORDINANCE		WITHOUT IEPA APPROVED GROUNDWATER ORDINANCE		WITH IEPA APPROVED GROUNDWATER ORDINANCE		WITHOUT IEPA APPROVED GROUNDWATER ORDINANCE		WITH IEPA APPROVED GROUNDWATER ORDINACE	WITHOUT IEPA APPROVED GROUNDWATER ORDINANCE	TOTAL NSW DISPOSAL, TYPE 1 (JT202009)
	1	2	3	4	5	6	7	8	9	10	11
						STAGE 1					
400+00 to 500+00											
500+00 to 600+00											
RAMP A											
RAMP C											
STAGE 1 TOTAL											
						STAGE 2					
400+00 to 500+00											
500+00 to 600+00											
RAMP A											
RAMP C											
STAGE 2 TOTAL											
TOTAL											

NOTES:

THESE NOTES TO DESIGNER AS SHOWN BELOW ARE TO CLARIFY THE CALCULATIONS OF JT202009 NON-SPECIAL WASTE DISPOSAL, TYPE 1.
EVALUATE IEPA APPROVED GROUNDWATER ORDINANCE IN THE MUNICIPALITIES WITHIN THE PROJECT LIMITS. UTILIZE THE EQUATIONS BELOW BASED ON THE IEPA APPROVED GROUNDWATER ORDINANCE AS APPLICABLE.
ADD RETAINING WALL QUANTITIES WHEN APPLICABLE TO THE FOLLOWING EQUATIONS.

STEP 1 – EARTHWORK AND INCIDENTAL NON-SPECIAL WASTE DISPOSAL, TYPE 1 CALCULATIONS

With IEPA Approved groundwater ordinance
If the sum of Type 1 approved (I1) and approved with restriction (M1) adjusted for shrinkage is:

Greater than embankment (G) quantity, then
Non Special Waste Disposal, Type 1 = [{(I1+M1)*SS-G)}/SS] + Q1+I3+Q3+M3 (Column 1)

Less than embankment (G) quantity, then
Non Special Waste Disposal, Type 1 = Q1+I3+Q3+M3 (Column 2)

Without IEPA Approved groundwater ordinance
If Type 1 approved (I1) adjusted for shrinkage is:

Greater than embankment (G) quantity, then
Non Special Waste Disposal, Type 1 = [{(I1)*SS-G)}/SS] + Q1+M1+I3+Q3+M3 (Column 3)

Less than embankment (G) quantity, then
Non Special Waste Disposal, Type 1 = Q1+M1+ I3+Q3+M3 (Column 4)

STEP 2 – TOPSOIL NON-SPECIAL WASTE DISPOSAL, TYPE 1 CALCULATIONS

With IEPA Approved groundwater ordinance
If the sum of Type 1 approved (I2) and approved with restriction (M2) is:

Greater than Topsoil Placement (X) quantity, then
Non Special Waste Disposal, Type 1 = (I2+M2)-X) + Q2 (column 5)

Less than Topsoil Placement (X) quantity, then
Non Special Waste Disposal, Type 1 = Q2 (Column 6)

Without IEPA Approved Groundwater Ordinance
If Type 1 approved (I2) is:

Greater than Topsoil Placement (X) quantity, then
Non Special Waste Disposal, Type 1 = (I2)-X + Q2+M2 (Column 7)

Less than Topsoil Placement (X) quantity, then
Non Special Waste Disposal, Type 1 = Q2+M2 (Column 8)

STEP 3 – SUM OF ALL NON-SPECIAL WASTE DISPOSAL, TYPE 1 QUANTITIES

With IEPA Approved Groundwater Ordinance
NON-SPECIAL WASTE DISPOSAL, TYPE 1 = EARTHWORK AND INCIDENTAL WITH IEPA APPROVED GROUNDWATER ORDINANCE + TOPSOIL WITH IEPA APPROVED GROUNDWATER ORDINANCE (Column 9)

Without IEPA Approved Groundwater Ordinance
NON-SPECIAL WASTE DISPOSAL, TYPE 1 = EARTHWORK AND INCIDENTAL WITHOUT IEPA APPROVED GROUNDWATER ORDINANCE + TOPSOIL WITHOUT IEPA APPROVED GROUNDWATER ORDINANCE (Column 10)

Total NSW Disposal, Type 1 = NON-SPECIAL WASTE DISPOSAL, TYPE 1 = Column 9 + Column 10

PLOT DRIVER: c:\hrs\wsp-pb-us-pw-02\wsp_...mac.ctb(d016165\pdf.tll.Tollway.pltcfg
PENTABLE: pw:\\wsp-us-pw.bentley.com:wsp-us-pw-02\Documents\Illinois Tollway GEG (09768R)\tz_Standards\Brad_Hoder\2019\ILTollway\CADTables\Pen\BlackWhite-ILTollway.TBL
PLOT DATE: 5/11/2021 PLOT TIME: 11:07:07 PM
PLOTTED BY: Brad A. Hoder
MODEL NAME: EARTHWORK SCHEDULE 4
FILE NAME: pw:\\wsp-us-pw.bentley.com:wsp-us-pw-02\Documents\Illinois Tollway GEG (09768R)\Standard Drawings and Base Sheets\Base Sheets\Section - MM00 RDY\M-RDY-407.dgn
PLOT SCALE: 0.1667 ' / in. PAGE SIZE: 17x11 (in.)

Illinois Tollway

EARTHWORK SCHEDULE

VERSION:	STANDARD:	SHEET:
2021-03	M-RDY-407	3 OF 4

GUARDRAIL SCHEDULE																
STATION FROM	STATION TO	OFFSET	APPROACH TERMINAL			GUARDRAIL TYPE						DEPARTURE TERMINAL			REFLECTORS/MARKERS	
			TRAFFIC BARRIER TERMINAL TYPE T1 (SPECIAL) TANGENT	TRAFFIC BARRIER TERMINAL TYPE T1-A (SPECIAL)	TRAFFIC BARRIER TERMINAL TYPE T10	GALVANIZED STEEL PLATE BEAM GUARDRAIL TYPE A, 6 FOOT POSTS	GALVANIZED STEEL PLATE BEAM GUARDRAIL TYPE A, 9 FOOT POSTS	GALVANIZED STEEL PLATE BEAM GUARDRAIL TYPE B, 6 FOOT POSTS	GALVANIZED STEEL PLATE BEAM GUARDRAIL TYPE B, 9 FOOT POSTS	GALVANIZED STEEL PLATE BEAM GUARDRAIL TYPE C, 6 FOOT POSTS	GALVANIZED STEEL PLATE BEAM GUARDRAIL TYPE C, 9 FOOT POSTS	TRAFFIC BARRIER TERMINAL TYPE T2	TRAFFIC BARRIER TERMINAL TYPE T6	TRAFFIC BARRIER TERMINAL TYPE T6B	GUARDRAIL BARRIER REFLECTORS, TYPE B	TERMINAL MARKER - DIRECT APPLIED
			JI631110	JI631112	JI631140	JI630002	JI630004	JI630007	JI630009	JI630012	JI630014	JI631120	JI631130	JI631135	JI782014	JI782110
			EACH	EACH	EACH	FOOT	FOOT	FOOT	FOOT	FOOT	FOOT	EACH	EACH	EACH	EACH	EACH
1000+00.00	1002+00.00	RT	1			200.0						1				
1005+00.00	1008+37.50	RT	1			300.0		12.5		25.0			1			
1010+00.00	1011+50.00	RT		1			150.0						1			
1012+00.00	1017+00.00	RT			1	350.0		62.5		87.5			1			
1020+00.00	1022+87.50	RT		1			187.5		75.0		25.0			1		
TOTAL			2	2	1	850	337.5	75	75	112.5	25	1	3	1	0	0

Illinois Tollway

GUARDRAIL SCHEDULE

VERSION:	STANDARD:	SHEET:
2021-03	M-RDY-407	4 OF 4

PLOT DRIVER: c:\bms\wsp-pb-us-pw-02\wsp__mac.rice\d0161165\pdf-ILTollway.pltcfg
PENTABLE: pw:\\wsp-us-pw.bentley.com:wsp-us-pw-02\Documents\Illinois Tollway GEG (997GRR)\zz_Standards\Brad_Hoder\2019\ILTollwayCAD\Tables\Pen\BlackWhite-ILTollway.TBL
PLOT DATE: 3/11/2021 PLOT TIME: 1:11:02 PM
PLOTTED BY: RiceM
MODEL NAME: GUARDRAIL SCHEDULE
FILE NAME: pw:\\wsp-us-pw.bentley.com:wsp-us-pw-02\Documents\Illinois Tollway GEG (997GRR)\Standard Drawings and Base Sheets\Base Sheets\Section - M\400 RDY\M-RDY-407.dgn
PLOT SCALE: 0.1667 ' / in. PAGE SIZE: 17x11 (in.)

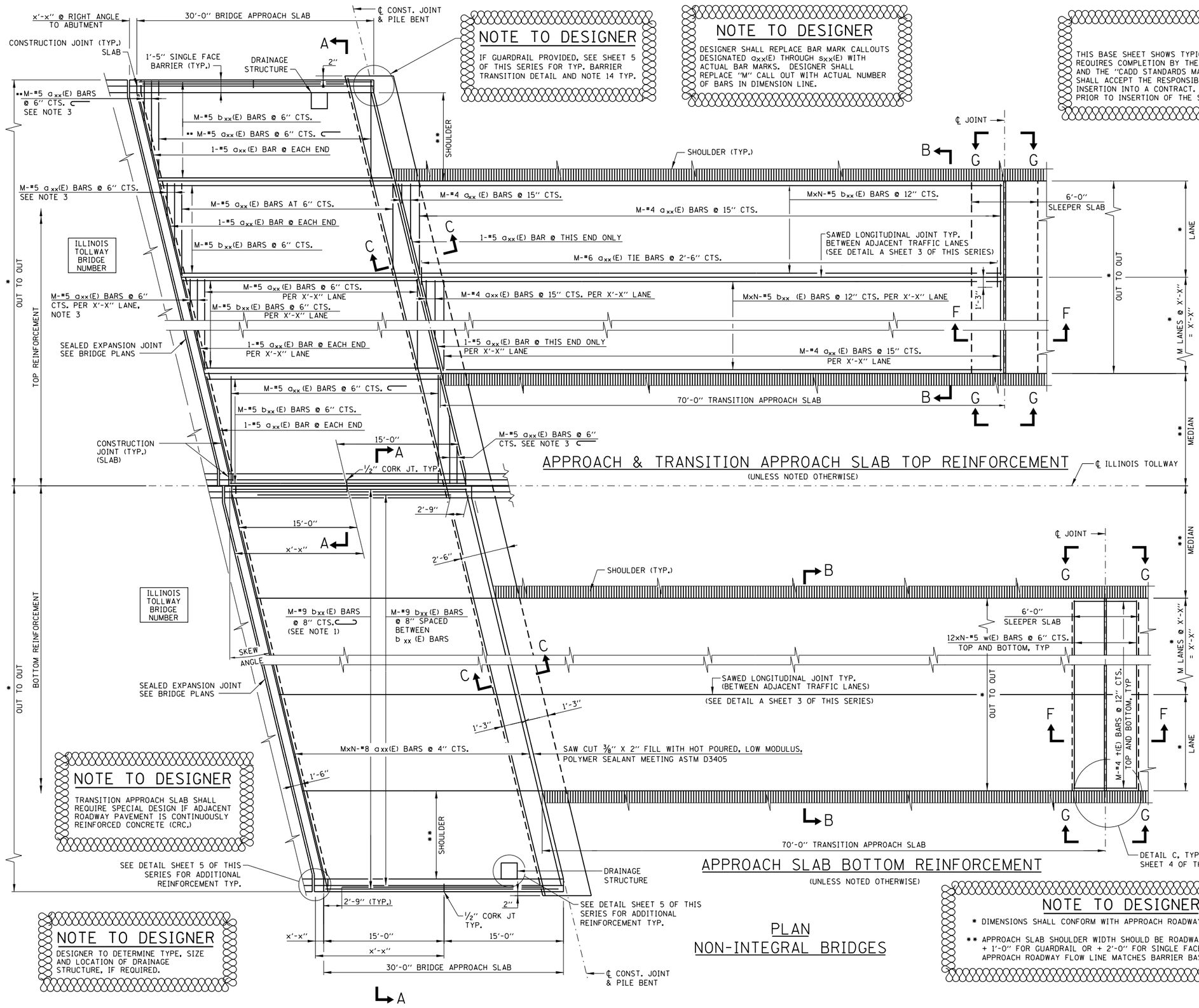

NOTE TO DESIGNER

IF GUARDRAIL PROVIDED, SEE SHEET 5 OF THIS SERIES FOR TYP. BARRIER TRANSITION DETAIL AND NOTE 14 TYP.

NOTE TO DESIGNER

DESIGNER SHALL REPLACE BAR MARK CALLOUTS DESIGNATED a_{xx}(E) THROUGH s_{xx}(E) WITH ACTUAL BAR MARKS. DESIGNER SHALL REPLACE "M" CALL OUT WITH ACTUAL NUMBER OF BARS IN DIMENSION LINE.

NOTE TO DESIGNER

THIS BASE SHEET SHOWS TYPICAL NEW CONSTRUCTION BUT IT IS NOT A STANDARD DRAWING. IT REQUIRES COMPLETION BY THE DESIGNER PRIOR TO INSERTION INTO A CONTRACT. MICROSTATION FILES AND THE "CADD STANDARDS MANUAL" ARE AVAILABLE ON THE ILLINOIS TOLLWAY WEBSITE. THE DESIGNER SHALL ACCEPT THE RESPONSIBILITY OF THE DESIGN OF THIS SHEET UPON ITS COMPLETION AND INSERTION INTO A CONTRACT. ALL "NOTE TO DESIGNER" BOXES SHALL BE REMOVED BY THE DESIGNER PRIOR TO INSERTION OF THE SHEET INTO THE PLAN SET.

APPROACH & TRANSITION APPROACH SLAB TOP REINFORCEMENT

(UNLESS NOTED OTHERWISE)

APPROACH SLAB BOTTOM REINFORCEMENT

(UNLESS NOTED OTHERWISE)

PLAN NON-INTEGRAL BRIDGES

NOTES:

1. TILT HOOK OF #9 BARS FOR MINIMUM 2 1/4" CLEARANCE.
2. USE 2'-8" MIN. LAP FOR #4 BARS. USE 4-0" MIN. LAP FOR #5 BARS. USE 5'-6" MIN. LAP FOR #6 BARS. USE 7'-10" MIN. FOR #8 BARS.
3. CUT REINFORCEMENT IN THE FIELD TO FIT THE SKEW AND USE REMAINDER IN OPPOSITE END, OR DISCARD OFF SITE. PAINT EXPOSED ENDS WITH EPOXY PAINT.
4. FOR SECTIONS A-A AND B-B SEE SHEET 3 OF THIS SERIES; FOR SECTIONS C-C, D-D, E-E, F-F AND VIEWS E'-E' AND G-G SEE SHEET 4 OF THIS SERIES; AND FOR SECTIONS H-H AND M-M SEE SHEET 5 OF THIS SERIES.
5. PROTECTIVE COAT SHALL BE APPLIED TO TOP AND TRAFFIC FACES OF BARRIERS.
6. TOOL EDGES OF EXPANSION JOINTS TO 1/4" RADIUS.
7. EXPOSED CONCRETE EDGES SHALL HAVE 3/4" x 45° CHAMFERS. CHAMFERS ON VERTICAL EDGES SHALL BE CONTINUED A MINIMUM OF ONE FOOT BELOW GROUND LEVEL.
8. CONCRETE BARRIERS SHALL BE CONSTRUCTED & PAID FOR IN ACCORDANCE WITH SECTIONS 503 AND 508 OF THE IDOT STANDARD SPECIFICATIONS.
9. IN THE CORNERS OF THE BENT WHEN APPROACH GUARDRAIL IS PROVIDED. THE BENT CORNER SHALL BE BLOCKED OUT AND THE REINFORCEMENT STEEL SHALL BE RESPACED (OR CUT) FOR GUARDRAIL POSTS, DRAINAGE STRUCTURES, NOISE ABATEMENT WALLS, ETC. AS NECESSARY AND AS APPROVED BY THE ENGINEER.
10. IN REFERENCE TO LONGITUDINAL CONSTRUCTION JOINTS ON SHEET 3 OF THIS SERIES; THESE BARS SHALL BE CUT TO FIT FROM LENGTHS SHOWN IN THE REINFORCEMENT BAR SCHEDULE FOR THE CONSTRUCTION JOINT. THESE BARS MAY BE REPLACED BY ALTERNATIVE BARS AND LENGTHS AS SHOWN IN THE DESIGN PLANS. PAINT EXPOSED ENDS WITH EPOXY PAINT.
11. EXPANSION ANCHORS AND DRILLED AND GROUTED DOWELS SHALL CONFORM TO SECTION 1006 OF THE IDOT STANDARD SPECIFICATIONS.
12. AS APPROVED BY THE ENGINEER, THE CONTRACTOR MAY ELECT TO REDUCE THE WIDTHS OF THE POUR BY USE OF THE OPTIONAL LONGITUDINAL CONSTRUCTION JOINT SHOWN. JOINTS SHALL BE LOCATED AT THE EDGE OF A TRAFFIC LANE.

NOTE TO DESIGNER

TRANSITION APPROACH SLAB SHALL REQUIRE SPECIAL DESIGN IF ADJACENT ROADWAY PAVEMENT IS CONTINUOUSLY REINFORCED CONCRETE (CRC.)

NOTE TO DESIGNER

DESIGNER TO DETERMINE TYPE, SIZE AND LOCATION OF DRAINAGE STRUCTURE, IF REQUIRED.

NOTE TO DESIGNER

* DIMENSIONS SHALL CONFORM WITH APPROACH ROADWAY.

** APPROACH SLAB SHOULDER WIDTH SHOULD BE ROADWAY SHOULDER WIDTH + 1'-0" FOR GUARDRAIL OR + 2'-0" FOR SINGLE FACE BARRIER SO APPROACH ROADWAY FLOW LINE MATCHES BARRIER BASE.

NOTE TO DESIGNER

\#\# USE #7 axx(E) HOOKED BARS AT 5" SPACING FOR TOP TRANSVERSE BARS OVER SHOULDER WHEN THE BARRIER HEIGHT IS 72".

Illinois Tollway

APPROACH SLAB, MAINLINE

DATE
03-01-2021

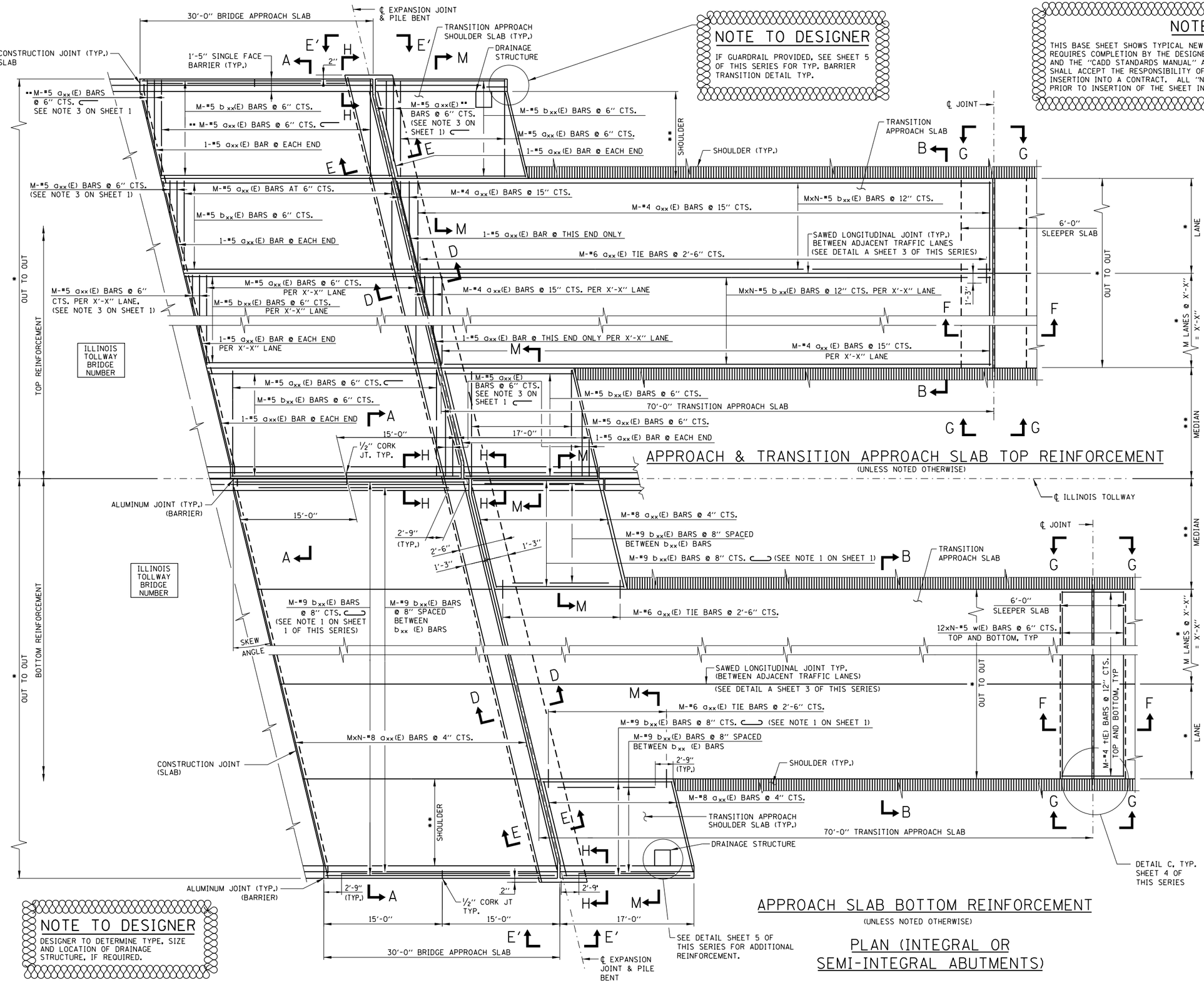

NOTE TO DESIGNER

IF GUARDRAIL PROVIDED, SEE SHEET 5 OF THIS SERIES FOR TYP. BARRIER TRANSITION DETAIL TYP.

NOTE TO DESIGNER

THIS BASE SHEET SHOWS TYPICAL NEW CONSTRUCTION BUT IT IS NOT A STANDARD DRAWING. IT REQUIRES COMPLETION BY THE DESIGNER PRIOR TO INSERTION INTO A CONTRACT. MICROSTATION FILES AND THE "CADD STANDARDS MANUAL" ARE AVAILABLE ON THE ILLINOIS TOLLWAY WEBSITE. THE DESIGNER SHALL ACCEPT THE RESPONSIBILITY OF THE DESIGN OF THIS SHEET UPON ITS COMPLETION AND INSERTION INTO A CONTRACT. ALL "NOTE TO DESIGNER" BOXES SHALL BE REMOVED BY THE DESIGNER PRIOR TO INSERTION OF THE SHEET INTO THE PLAN SET.

NOTE TO DESIGNER

DESIGNER SHALL REPLACE BAR MARK CALLOUTS DESIGNATED a_{xx}(E) THROUGH s_{xx}(E) WITH ACTUAL BAR MARKS. DESIGNER SHALL REPLACE "M" CALL OUT WITH ACTUAL NUMBER OF BARS IN DIMENSION LINE.

NOTE TO DESIGNER

TRANSITION APPROACH SLAB SHALL REQUIRE SPECIAL DESIGN IF ADJACENT ROADWAY PAVEMENT IS CONTINUOUSLY REINFORCED CONCRETE (CRC.)

NOTE TO DESIGNER

* DIMENSIONS SHALL CONFORM WITH APPROACH ROADWAY.

** APPROACH SLAB SHOULDER WIDTH SHOULD BE ROADWAY SHOULDER WIDTH + 1'-0" FOR GUARDRAIL OR + 2'-0" FOR SINGLE FACE BARRIER SO APPROACH ROADWAY FLOW LINE MATCHES BARRIER BASE.

NOTE TO DESIGNER

NOTE TO DESIGNER

DESIGNER TO DETERMINE TYPE, SIZE AND LOCATION OF DRAINAGE STRUCTURE, IF REQUIRED.

NOTES:

1. FOR GENERAL NOTES SEE SHEET 1 OF THIS SERIES.

Illinois Tollway

APPROACH SLAB, MAINLINE

DATE
03-01-2021

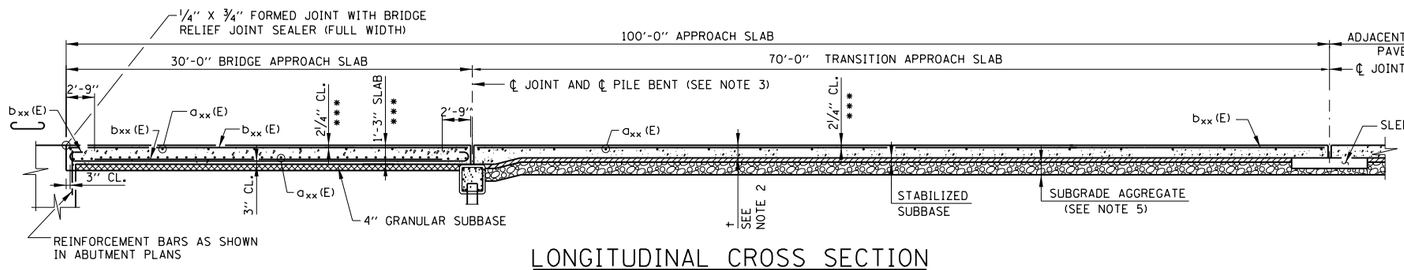

LONGITUDINAL CROSS SECTION

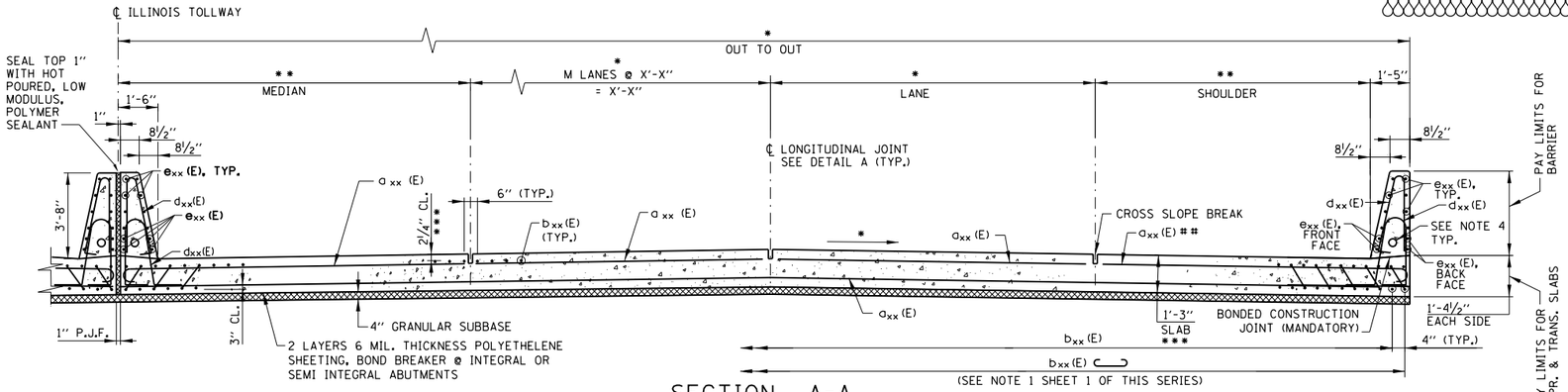

SECTION A-A

(SEE NOTE 6)

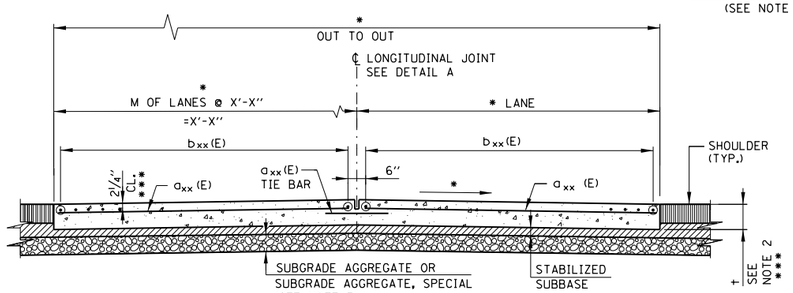

SECTION B-B

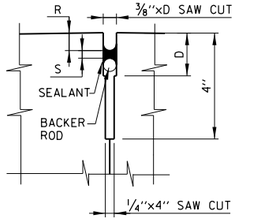

DETAIL E

NOTE:
DIMENSIONS D, R & S ARE AS RECOMMENDED BY THE SEALANT MANUFACTURER.

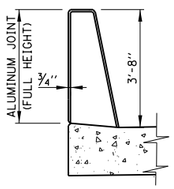

SECTION I-I

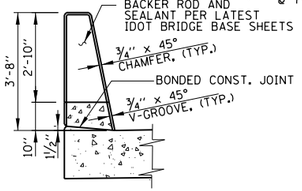

SECTION J-J

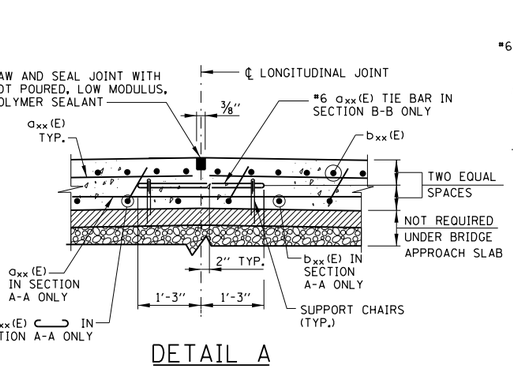

DETAIL A
TYPICAL LONGITUDINAL JOINT

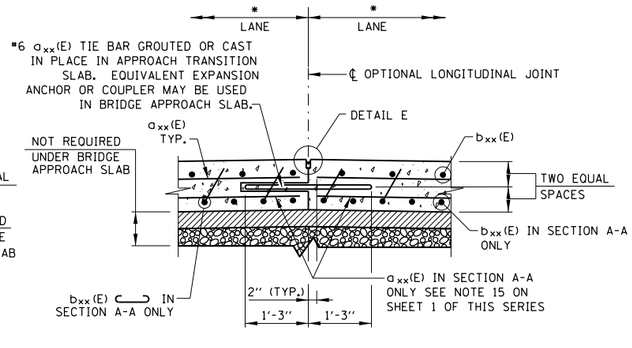

DETAIL A
OPTIONAL LONGITUDINAL JOINT

(SEE NOTE 17 ON SHEET 1 OF THIS SERIES)

NOTE TO DESIGNER

USE #7 axx(E) HOOKED BARS AT 5" SPACING FOR TOP TRANSVERSE BARS OVER SHOULDER WHEN THE BARRIER HEIGHT IS 72".

NOTE TO DESIGNER

REPLACE THE BARRIER REINFORCEMENT AND DETAILS IF THE BARRIER TYPE IS DIFFERENT. TYP. OTHER SHEETS.

NOTE TO DESIGNER

IF GUARDRAIL PROVIDED, SEE SHEET 5 OF THIS SERIES FOR TYP. BARRIER TRANSITION DETAIL

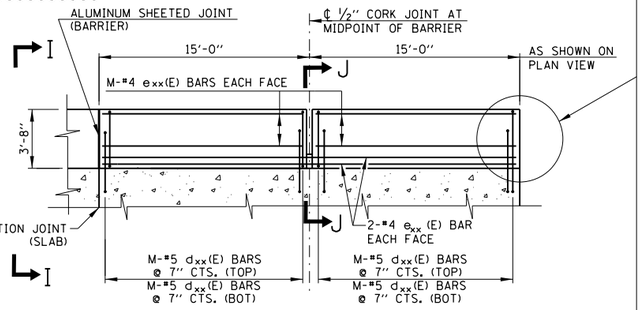

APPROACH SLAB BARRIER ELEVATION

(INTEGRAL OR SEMI-INTEGRAL)

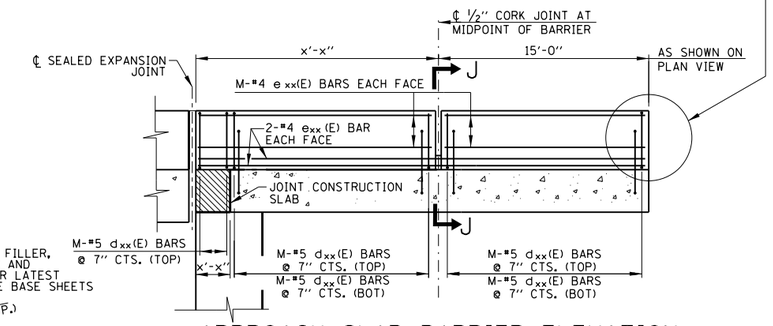

APPROACH SLAB BARRIER ELEVATION

(NON-INTEGRAL)

NOTES:

1. SEE SHEET 1 OF THIS SERIES FOR GENERAL NOTES.
2. THE DIMENSION † IS THE THICKNESS OF THE TRANSITION APPROACH SLAB AS DEFINED IN THE ROADWAY PLANS.
3. INTEGRAL ABUTMENT JOINT SHOWN NON-INTERGRAL ABUTMENT JOINT SIMILAR. SEE SHEET 4 OF THIS SERIES.
4. COORDINATE NEED FOR 2" PVC CONDUIT WITH ELECTRICAL AND ITS PLANS. CONDUIT SHALL BE PLACED TO MISS REINFORCEMENT. DO NOT CUT REINFORCEMENT BARS.
5. THE THICKNESS OF THE STABILIZED SUBBASE AND SUBGRADE AGGREGATE SHALL BE THE SAME AS FOR THE ADJACENT PAVEMENT SECTIONS.
6. IF THE CONTRACTOR ELECTS TO SLIPFORM THE PARAPET THEN THE PARAPET CROSS-SECTIONAL AREA, PARAPET REINFORCEMENT BARS CLEARANCES AND THE APPROACH SLAB REINFORCEMENT BARS SHALL BE REVISED ACCORDINGLY TO ACCOUNT FOR THE ADDITIONAL SLAB WIDTH TO ALLOW SLIPFORM.
7. THE ⅛" ALUMINUM SHEET SHALL BE ASTM B 209 ALLOY 3003-H14 AND COATED TO MINIMIZE REACTION WITH WET CONCRETE.

NOTE TO DESIGNER

THIS BASE SHEET SHOWS TYPICAL NEW CONSTRUCTION BUT IT IS NOT A STANDARD DRAWING. IT REQUIRES COMPLETION BY THE DESIGNER PRIOR TO INSERTION INTO A CONTRACT. MICROSTATION FILES AND THE "CADD STANDARDS MANUAL" ARE AVAILABLE ON THE ILLINOIS TOLLWAY WEBSITE. THE DESIGNER SHALL ACCEPT THE RESPONSIBILITY OF THE DESIGN OF THIS SHEET UPON ITS COMPLETION AND INSERTION INTO A CONTRACT. ALL "NOTE TO DESIGNER" BOXES SHALL BE REMOVED BY THE DESIGNER PRIOR TO INSERTION OF THE SHEET INTO THE PLAN SET.

* DIMENSIONS SHALL CONFORM WITH APPROACH ROADWAY.

** APPROACH SLAB SHOULDER WIDTH SHOULD BE ROADWAY SHOULDER WIDTH + 1'-0" FOR GUARDRAIL OR + 2'-0" FOR SINGLE FACE BARRIER SO APPROACH ROADWAY FLOW LINE MATCHES BARRIER BASE.

*** INCREASE BY ¼" FOR SMOOTHNESS GRINDING.

DESIGNER SHALL REPLACE BAR MARK CALLOUTS DESIGNATED a_{xx}(E) THROUGH s_{xx}(E) WITH ACTUAL BAR MARKS. DESIGNER SHALL REPLACE "M" CALL OUT WITH ACTUAL NUMBER IN DIMENSION LINE.

Illinois Tollway

APPROACH SLAB, MAINLINE

DATE
03-01-2021

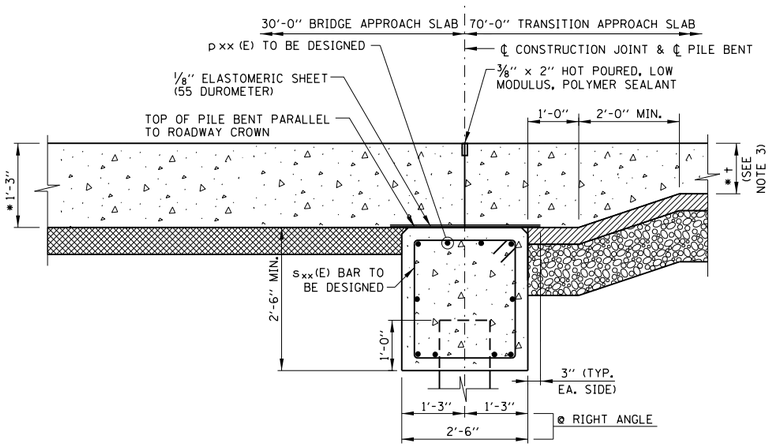

SECTION C-C
FOR NON-INTEGRAL ABUTMENT

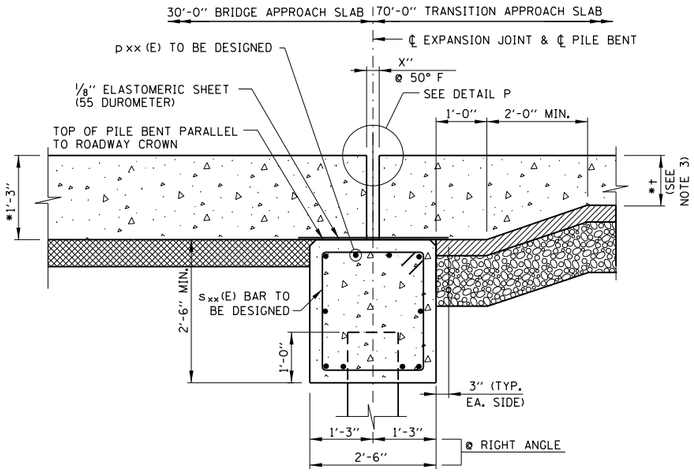

SECTION D-D
FOR INTEGRAL & SEMI-INTEGRAL ABUTMENT

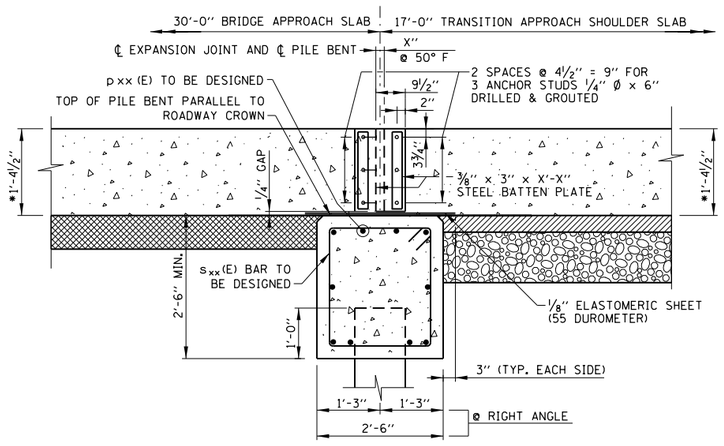

VIEW E'-E'
END ELEVATION OF EXPANSION JOINT

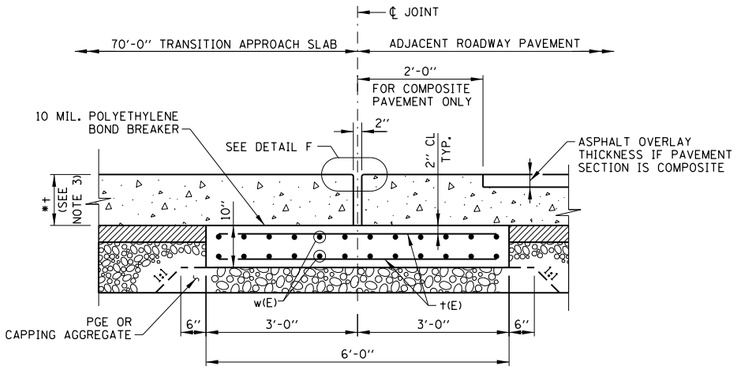

SECTION F-F

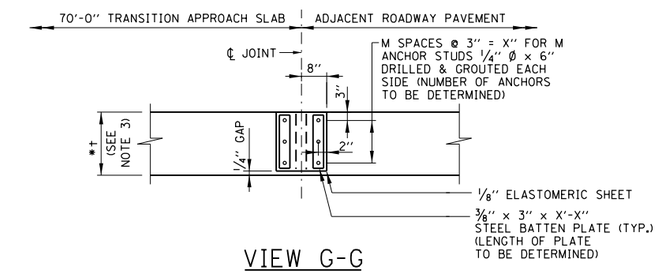

VIEW G-G
END ELEVATION OF JOINT

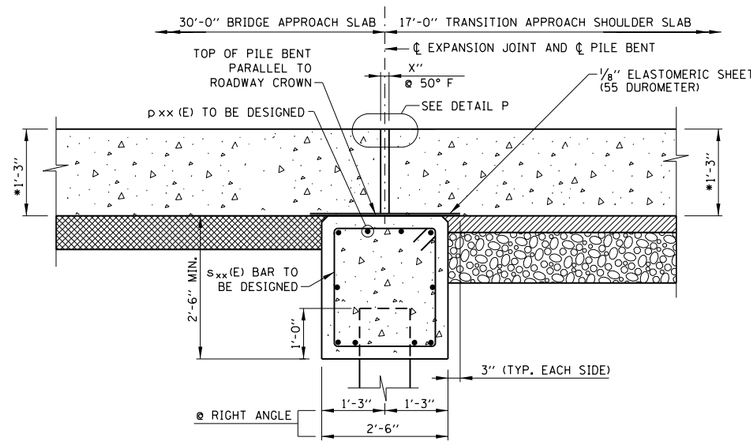

SECTION E-E

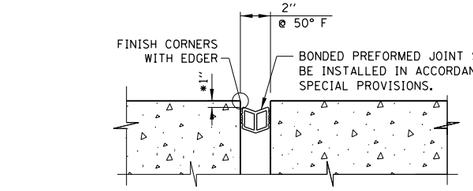

DETAIL F
TRANSITION JOINT

NOTE TO DESIGNER

* INCREASE BY 1/4" FOR SMOOTHNESS GRINDING.

NOTE TO DESIGNER

DESIGNER TO PROVIDE JOINT SIZE AND OPENING CONSISTENT WITH BRIDGE AND APPROACH CONTRIBUTING LENGTH. DESIGNER TO DETERMINE NUMBER OF ANCHORS AND SIZE OF BATTEN PLATE.

NOTE TO DESIGNER

DESIGNER SHALL REPLACE BAR MARK CALLOUTS DESIGNATED a_{XX}(E) THROUGH s_{XX}(E) WITH ACTUAL BAR MARKS. DESIGNER SHALL REPLACE "M" CALL OUT WITH ACTUAL NUMBER OF BARS IN DIMENSION LINE.

NOTE TO DESIGNER

THIS BASE SHEET SHOWS TYPICAL NEW CONSTRUCTION BUT IT IS NOT A STANDARD DRAWING. IT REQUIRES COMPLETION BY THE DESIGNER PRIOR TO INSERTION INTO A CONTRACT. MICROSTATION FILES AND THE "CADD STANDARDS MANUAL" ARE AVAILABLE ON THE ILLINOIS TOLLWAY WEBSITE. THE DESIGNER SHALL ACCEPT THE RESPONSIBILITY OF THE DESIGN OF THIS SHEET UPON ITS COMPLETION AND INSERTION INTO A CONTRACT. ALL "NOTE TO DESIGNER" BOXES SHALL BE REMOVED BY THE DESIGNER PRIOR TO INSERTION OF THE SHEET INTO THE PLAN SET.

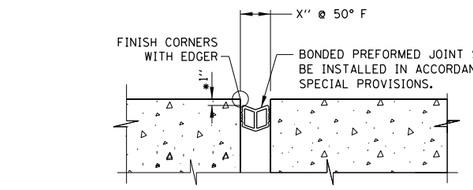

DETAIL P
APPROACH & TRANSITION JOINT

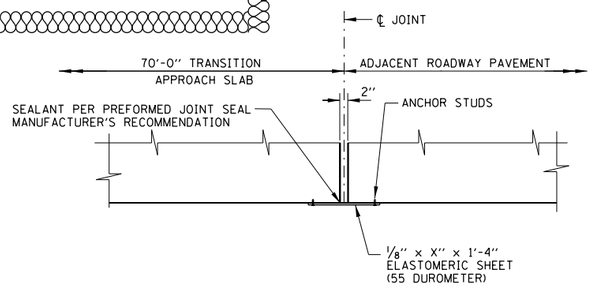

DETAIL C
END PLAN OF JOINT

LEGEND

- CONCRETE
- STABILIZED SUBBASE
- SUBGRADE AGGREGATE OR SUBGRADE AGGREGATE, SPECIAL
- GRANULAR SUBBASE

NOTES:

1. IN VIEW E'-E' AND VIEW G-G, ANCHOR STUDS SHALL BE INSTALLED IN ACCORDANCE WITH ARTICLE 1006.09 OF THE IDOT STANDARD SPECIFICATIONS. STEEL PLATES, ANCHOR STUDS, NUTS AND WASHERS SHALL BE GALVANIZED.
2. THE THICKNESSES OF STABILIZED SUBBASE AND SUBGRADE AGGREGATE SHALL BE THE SAME AS FOR THE ADJACENT PAVEMENT SECTIONS.
3. THE DIMENSION † IS THE THICKNESS OF THE TRANSITION APPROACH SLAB AS DEFINED IN THE ROADWAY PLANS.
4. FOR PILE BENT DETAILS AND QUANTITIES SEE SHEET XX.
5. FOR GENERAL NOTES SEE SHEET 1 OF THIS SERIES.

Illinois Tollway

APPROACH SLAB, MAINLINE

DATE
3-01-2021

NOTE TO DESIGNER

USE TYPICAL BARRIER TRANSITION DETAIL AS REQUIRED

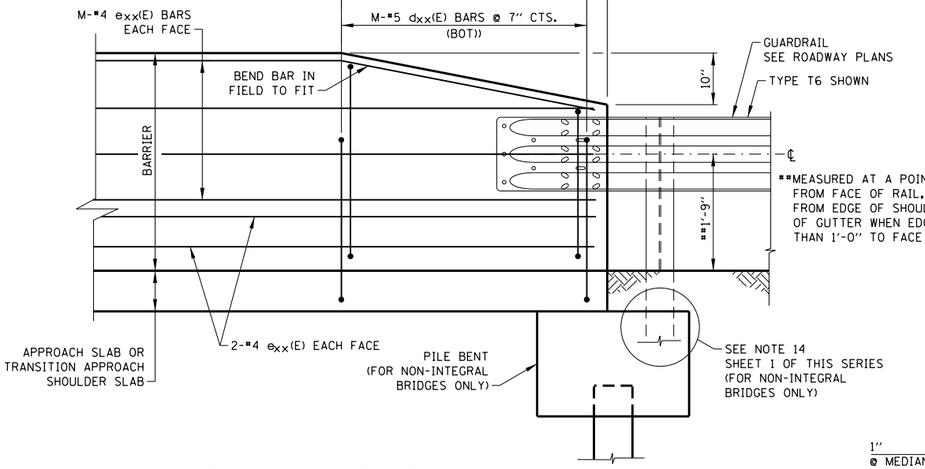

NO ATTACHMENTS ARE ALLOWED ON THE BACK SIDE OF BARRIER WITHIN 4'-0" FROM ITS END.

** MEASURED AT A POINT 1'-0" FROM FACE OF RAIL, OR FROM EDGE OF SHOULDER/EDGE OF GUTTER WHEN EDGE IS MORE THAN 1'-0" TO FACE OF RAIL.

TYPICAL BARRIER TRANSITION DETAIL

(CURB AND GUTTER NOT SHOWN FOR CLARITY)

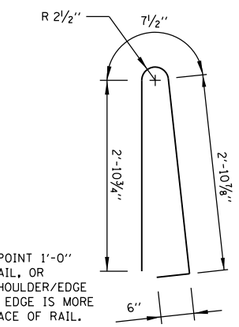

BAR dxx(E)

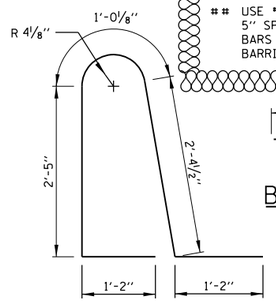

BAR dxx(E)

NOTE TO DESIGNER

USE #7 axx(E) HOOKED BARS AT 5" SPACING FOR TOP TRANSVERSE BARS OVER SHOULDER WHEN THE BARRIER HEIGHT IS 72".

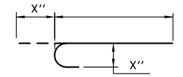

BARS axx (E)

NOTE TO DESIGNER

THIS BASE SHEET SHOWS TYPICAL NEW CONSTRUCTION BUT IT IS NOT A STANDARD DRAWING. IT REQUIRES COMPLETION BY THE DESIGNER PRIOR TO INSERTION INTO A CONTRACT. MICROSTATION FILES AND THE "CADD STANDARDS MANUAL" ARE AVAILABLE ON THE ILLINOIS TOLLWAY WEBSITE. THE DESIGNER SHALL ACCEPT THE RESPONSIBILITY OF THE DESIGN OF THIS SHEET UPON ITS COMPLETION AND INSERTION INTO A CONTRACT. ALL "NOTE TO DESIGNER" BOXES SHALL BE REMOVED BY THE DESIGNER PRIOR TO INSERTION OF THE SHEET INTO THE PLAN SET.

NOTE TO DESIGNER

••••• SELECT APPLICABLE PAY ITEM TO MATCH THE BRIDGE.

NOTE TO DESIGNER

BARS dxx(E) SHOWN IN THIS SHEET ARE APPLICABLE FOR 44" BARRIERS ONLY. UPDATE BASED ON BARRIER TYPE.

BILL OF MATERIAL FOR APPROACH AND TRANSITION SLABS

BAR	NO.	SIZE	LENGTH	SHAPE
axx(E)				
axx(E)				
bxx(E)		#9	32'-0"	
bxx(E)		#9	19'-0"	
dxx(E)		#5	8'-2"	
t(E)		#4	5'-8"	
w(E)		#5		

PAY ITEM NO.	DESCRIPTION	UNIT	QUANTITY
50300260	BRIDGE DECK GROOVING	SQ. FT.	
50300300	PROTECTIVE COAT	SQ. YD.	
JI420040	BRIDGE APPROACH SLAB	SQ. YD.	
JI420041	TRANSITION APPROACH SLAB	SQ. YD.	
JI420046	TRANSITION APPROACH SHOULDER SLAB	SQ. YD.	
JS503160	DIAMOND GRINDING AND SURFACE SMOOTHNESS FOR BRIDGE SECTIONS	SQ. YD.	
JT421510	SLEEPER SLAB	SQ. YD.	
JT525125	BONDED PREFORMED JOINT SEAL, 2 IN.	FT.	
X5030250	BRIDGE DECK GROOVING (LONGITUDINAL)	SQ. FT.	
*	REINFORCEMENT BARS, EPOXY COATED	LBS.	

* FOR INFORMATION ONLY

NOTE TO DESIGNER

* DIMENSIONS SHALL CONFORM WITH APPROACH ROADWAY.

** APPROACH SLAB SHOULDER WIDTH SHOULD BE ROADWAY SHOULDER WIDTH + 1'-0" FOR GUARDRAIL OR + 2'-0" FOR SINGLE FACE BARRIER SO APPROACH ROADWAY FLOW LINE MATCHES BARRIER BASE.

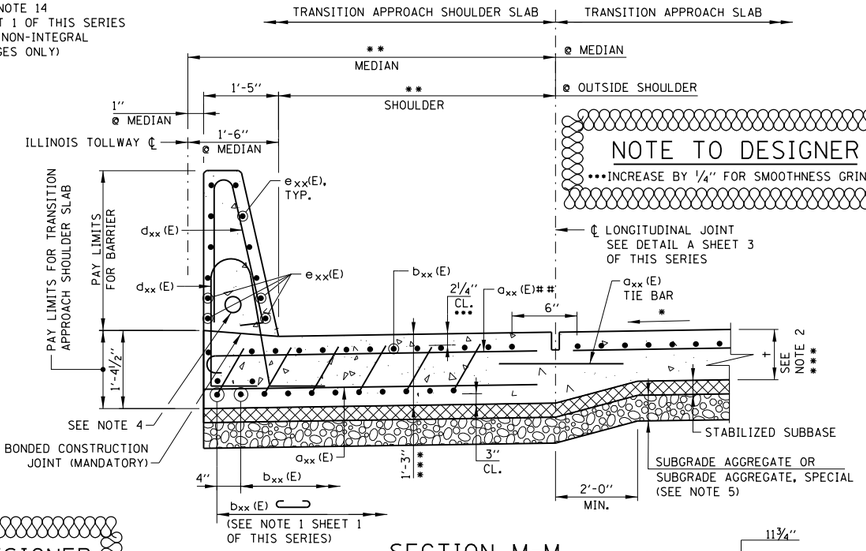

SECTION M-M

(SEE NOTE 6)

NOTE TO DESIGNER

••• INCREASE BY ¼" FOR SMOOTHNESS GRINDING.

℄ LONGITUDINAL JOINT SEE DETAIL A SHEET 3 OF THIS SERIES

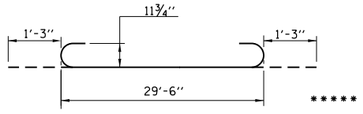

BARS bxx (E)

*****

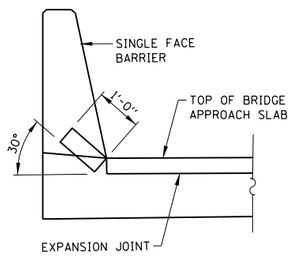

****

*****

NOTE TO DESIGNER

DESIGNER SHALL REPLACE BAR MARK CALLOUTS DESIGNATED axx(E) THROUGH sxx(E) WITH ACTUAL BAR MARKS. DESIGNER SHALL REPLACE "M" CALL OUT WITH ACTUAL NUMBER OF BARS IN DIMENSION LINE.

NOTE TO DESIGNER

QUANTITIES FOR BRIDGE DECK GROOVING SHALL INCLUDE BOTH TRANSITION AND APPROACH SLABS. LIMITS ARE TRAVEL LANES ONLY.

NOTE TO DESIGNER

QUANTITIES FOR DIAMOND GRINDING, IF APPLICABLE, INCLUDE TRANSITION, TRANSITION APPROACH SHOULDER AND APPROACH SLAB. LIMITS ARE THE FULL WIDTH LESS 2FT AT EACH PARAPET.

BILL OF MATERIAL FOR BARRIERS

BAR	NO.	SIZE	LENGTH	SHAPE
dxx(E)		#5	7'-0"	
exx(E)				

PAY ITEM NO.	DESCRIPTION	UNIT	QUANTITY
50300255	CONCRETE SUPERSTRUCTURE	CU. YD.	
50800205	REINFORCEMENT BARS, EPOXY COATED	LBS.	
50300300	PROTECTIVE COAT	SQ. YD.	

NOTE TO DESIGNER

IF GUARDRAIL PROVIDED, SEE TYP. BARRIER TRANSITION DETAIL.

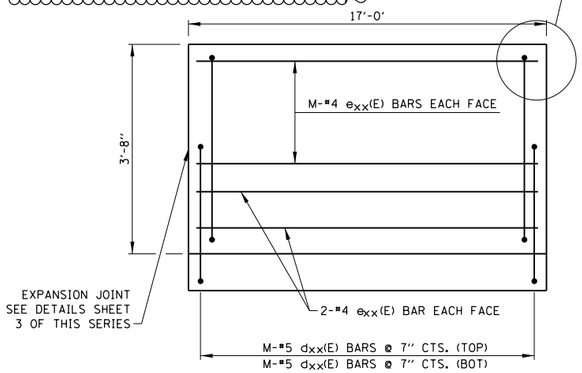

TRANSITION APPROACH SHOULDER SLAB BARRIER ELEVATION

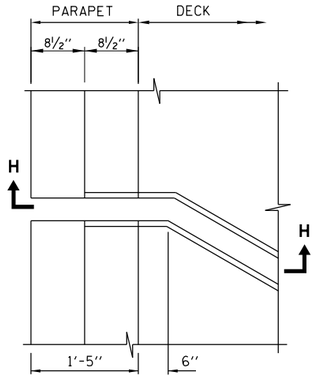

PLAN OF JOINT AT BARRIER

(FOR SKEWS GREATER THAN OR EQUAL TO 10 DEGREES)

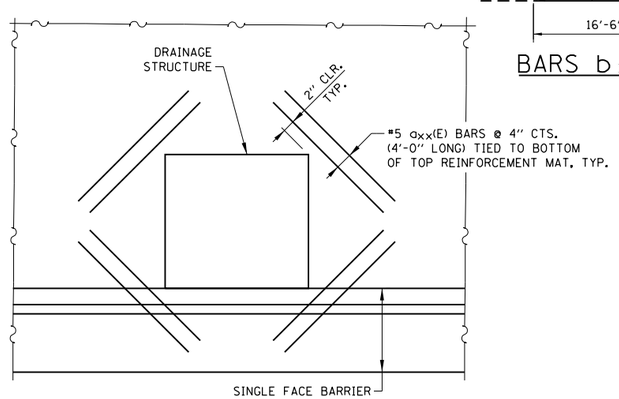

ADDITIONAL REINFORCEMENT AT DRAINAGE STRUCTURES

CUT TRANSVERSE axx(E) BARS AND LONGITUDINAL bxx(E) BARS IN SLAB TO CLEAR DRAINAGE STRUCTURE. RESPACE dxx(E) BARS TO MISS DRAINAGE STRUCTURE.

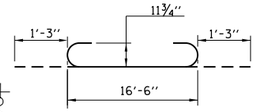

BARS bxx (E)

SECTION H-H

NOTE TO DESIGNER

**** ADD PAYITEM FOR OTHER JOINT SIZES AS APPLICABLE

PAY ITEM NO.	DESCRIPTION	UNIT	QUANTITY

NOTES:

1. THE AREA OF EACH BRIDGE APPROACH SLAB, TRANSITION APPROACH SLAB AND TRANSITION APPROACH SHOULDER SLAB WILL BE MEASURED IN PLACE AND COMPUTED IN SQUARE YARDS. SEE SPECIAL PROVISIONS FOR OTHER WORK THAT IS INCLUDED IN THE COST OF THIS ITEM.
2. THE DIMENSION t IS THE THICKNESS OF THE TRANSITION APPROACH SLAB AS DEFINED IN THE ROADWAY PLANS.
3. FOR GENERAL NOTES SEE SHEET 1 OF THIS SERIES.
4. COORDINATE NEED FOR 2" PVC CONDUIT WITH ELECTRICAL AND ITS PLANS. CONDUIT SHALL BE PLACED TO MISS REINFORCEMENT. DO NOT CUT REINFORCEMENT BARS.
5. THE THICKNESS OF THE STABILIZED SUBBASE AND SUBGRADE AGGREGATE SHALL BE THE SAME AS FOR THE ADAJECENT PAVEMENT SECTIONS.
6. IF THE CONTRACTOR ELECTS TO SLIPFORM THE PARAPET THEN THE PARAPET CROSS-SECTIONAL AREA, PARAPET REINFORCEMENT BARS CLEARANCES AND THE APPROACH SLAB REINFORCEMENT BARS SHALL BE REVISED ACCORDINGLY TO ACCOUNT FOR THE ADDITIONAL SLAB WIDTH TO ALLOW SLIPFORM.

Illinois Tollway

APPROACH SLAB, MAINLINE

DATE
03-01-2021

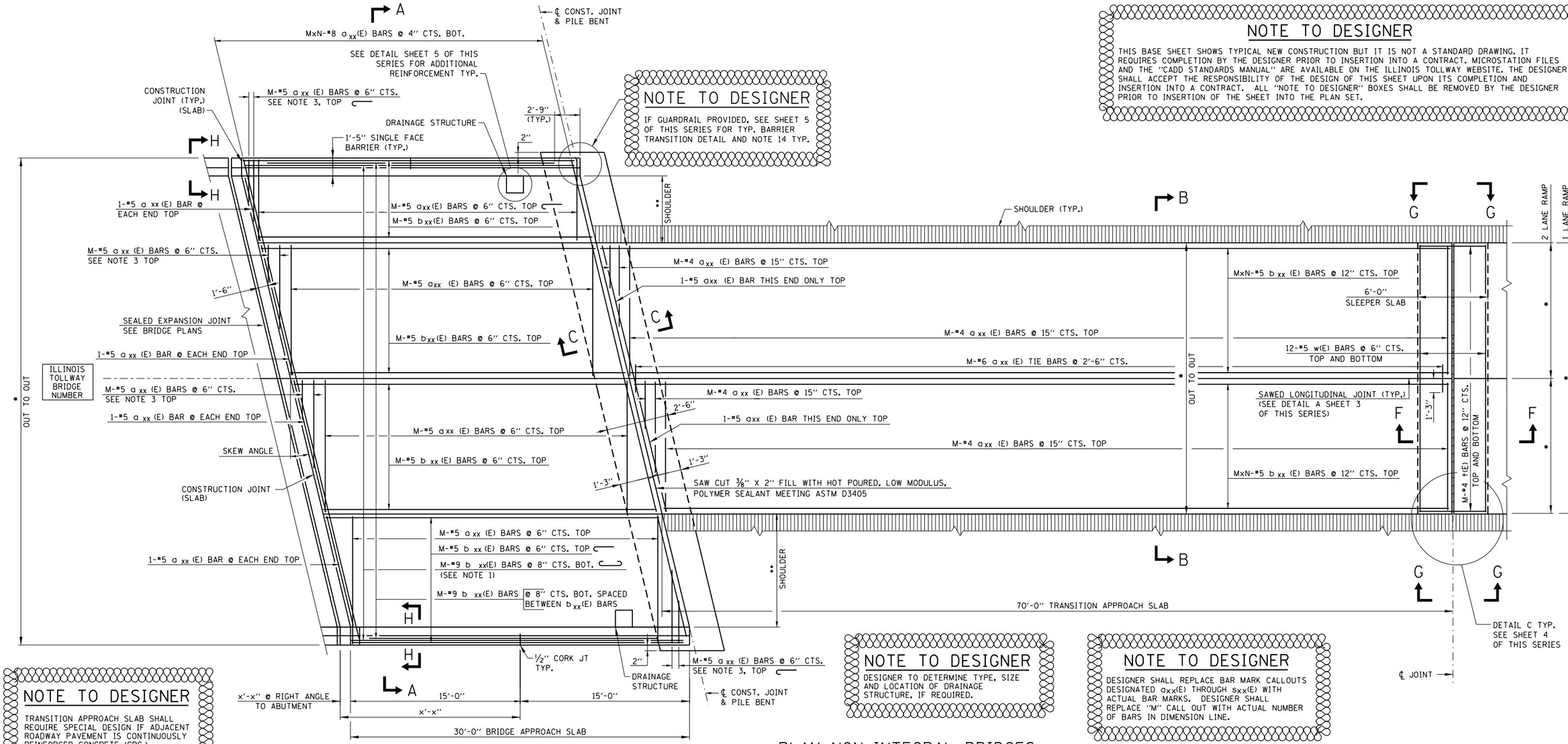

NOTE TO DESIGNER

THIS BASE SHEET SHOWS TYPICAL NEW CONSTRUCTION BUT IT IS NOT A STANDARD DRAWING. IT REQUIRES COMPLETION BY THE DESIGNER PRIOR TO INSERTION INTO A CONTRACT. MICROSTATION FILES AND THE "CADD STANDARDS MANUAL" ARE AVAILABLE ON THE ILLINOIS TOLLWAY WEBSITE. THE DESIGNER SHALL ACCEPT THE RESPONSIBILITY OF THE DESIGN OF THIS SHEET UPON ITS COMPLETION AND INSERTION INTO A CONTRACT. ALL "NOTE TO DESIGNER" BOXES SHALL BE REMOVED BY THE DESIGNER PRIOR TO INSERTION OF THE SHEET INTO THE PLAN SET.

NOTE TO DESIGNER

IF GUARDRAIL PROVIDED, SEE SHEET 5 OF THIS SERIES FOR TYP. BARRIER TRANSITION DETAIL AND NOTE 14 TYP.

NOTE TO DESIGNER

TRANSITION APPROACH SLAB SHALL REQUIRE SPECIAL DESIGN IF ADJACENT ROADWAY PAVEMENT IS CONTINUOUSLY REINFORCED CONCRETE (CRC.)

NOTE TO DESIGNER

DESIGNER TO DETERMINE TYPE, SIZE AND LOCATION OF DRAINAGE STRUCTURE, IF REQUIRED.

NOTE TO DESIGNER

DESIGNER SHALL REPLACE BAR MARK CALLOUTS DESIGNATED a_{xx}(E) THROUGH s_{xx}(E) WITH ACTUAL BAR MARKS. DESIGNER SHALL REPLACE "N" CALL OUT WITH ACTUAL NUMBER OF BARS IN DIMENSION LINE.

PLAN NON-INTEGRAL BRIDGES

NOTES:

1. TILT HOOK OF #9 BARS FOR MINIMUM 2¼" CLEARANCE.
2. USE 2'-8" MIN. LAP FOR #4 BARS, USE 4'-0" MIN. LAP FOR #5 BARS, USE 5'-6" MIN. LAP FOR #6 BARS, USE 7'-10" MIN. FOR #8 BARS.
3. CUT REINFORCEMENT IN THE FIELD TO FIT THE SKEW AND USE REMAINDER IN OPPOSITE END, OR DISCARD OFF SITE. PAINT EXPOSED ENDS WITH EPOXY PAINT.
4. FOR SECTIONS A-A AND B-B SEE SHEET 3 OF 5; FOR SECTIONS C-C, D-D, E-E, F-F AND VIEWS E'-E' AND G-G SEE SHEET 4; AND FOR SECTIONS H-H AND M-M SEE SHEET 5.
5. PROTECTIVE COAT SHALL BE APPLIED TO THE TOP OF APPROACH SLAB, TRANSITION SLAB, TRANSITION SHOULDER SLAB, AND TOP AND TRAFFIC FACES OF BARRIERS.
6. TOOL EDGES OF EXPANSION JOINTS TO ¼" RADIUS.
7. EXPOSED CONCRETE EDGES SHALL HAVE ¾" x 45° CHAMFERS. CHAMFERS ON VERTICAL EDGES SHALL BE CONTINUED A MINIMUM OF ONE FOOT BELOW GROUND LEVEL.
8. CONCRETE BARRIERS SHALL BE CONSTRUCTED & PAID FOR IN ACCORDANCE WITH SECTIONS 503 AND 508 OF THE STANDARD SPECIFICATIONS.
9. IN THE CORNERS OF THE APPROACH SLAB BENT WHEN APPROACH GUARDRAIL IS PROVIDED, THE BENT CORNER SHALL BE BLOCKED OUT AND THE REINFORCEMENT STEEL SHALL BE RESPACED (OR CUT) FOR GUARDRAIL POSTS, DRAINAGE STRUCTURES, NOISE ABATEMENT WALLS, ETC. AS NECESSARY AND AS APPROVED BY THE ENGINEER.
10. IN REFERENCE TO LONGITUDINAL CONSTRUCTION JOINTS ON SHEET 3 OF THIS SERIES; THESE BARS SHALL BE CUT TO FIT FROM LENGTHS SHOWN IN THE REINFORCEMENT BAR SCHEDULE FOR THE CONSTRUCTION JOINT. THESE BARS MAY BE REPLACED BY ALTERNATIVE BARS AND LENGTHS AS SHOWN IN THE DESIGN PLANS. PAINT EXPOSED ENDS WITH EPOXY PAINT.
11. EXPANSION ANCHORS AND DRILLED AND GROUTED DOWELS SHALL CONFORM TO SECTION 1006 OF THE STANDARD SPECIFICATIONS.
12. AS APPROVED BY THE ENGINEER, THE CONTRACTOR MAY ELECT TO REDUCE THE WIDTHS OF THE POUR BY USE OF THE OPTIONAL LONGITUDINAL CONSTRUCTION JOINT SHOWN. JOINTS SHALL BE LOCATED AT THE EDGE OF A TRAFFIC LANE.
13. JOINT SEAL MATERIAL SHALL EXTEND TO OUTER FACE OF ALL FORM WORK, TO PREVENT CONCRETE FROM LEAKING BEYOND FORMWORK OR JOINT SEAL, SUCH THAT COMPLETED JOINT WILL NOT HAVE CONCRETE INHIBIT JOINT MOVEMENT.

NOTE TO DESIGNER

* DIMENSIONS SHALL CONFORM WITH APPROACH ROADWAY.

** APPROACH SLAB SHOULDER WIDTH SHOULD BE ROADWAY SHOULDER WIDTH + 1'-0" FOR GUARDRAIL OR + 2'-0" FOR SINGLE FACE BARRIER SO APPROACH ROADWAY FLOW LINE MATCHES BARRIER BASE.

Illinois Tollway

APPROACH SLAB, RAMP

DATE
03-01-2021

NOTE TO DESIGNER

THIS BASE SHEET SHOWS TYPICAL NEW CONSTRUCTION BUT IT IS NOT A STANDARD DRAWING. IT REQUIRES COMPLETION BY THE DESIGNER PRIOR TO INSERTION INTO A CONTRACT. MICROSTATION FILES AND THE "CADD STANDARDS MANUAL" ARE AVAILABLE ON THE ILLINOIS TOLLWAY WEBSITE. THE DESIGNER SHALL ACCEPT THE RESPONSIBILITY OF THE DESIGN OF THIS SHEET UPON ITS COMPLETION AND INSERTION INTO A CONTRACT. ALL "NOTE TO DESIGNER" BOXES SHALL BE REMOVED BY THE DESIGNER PRIOR TO INSERTION OF THE SHEET INTO THE PLAN SET.

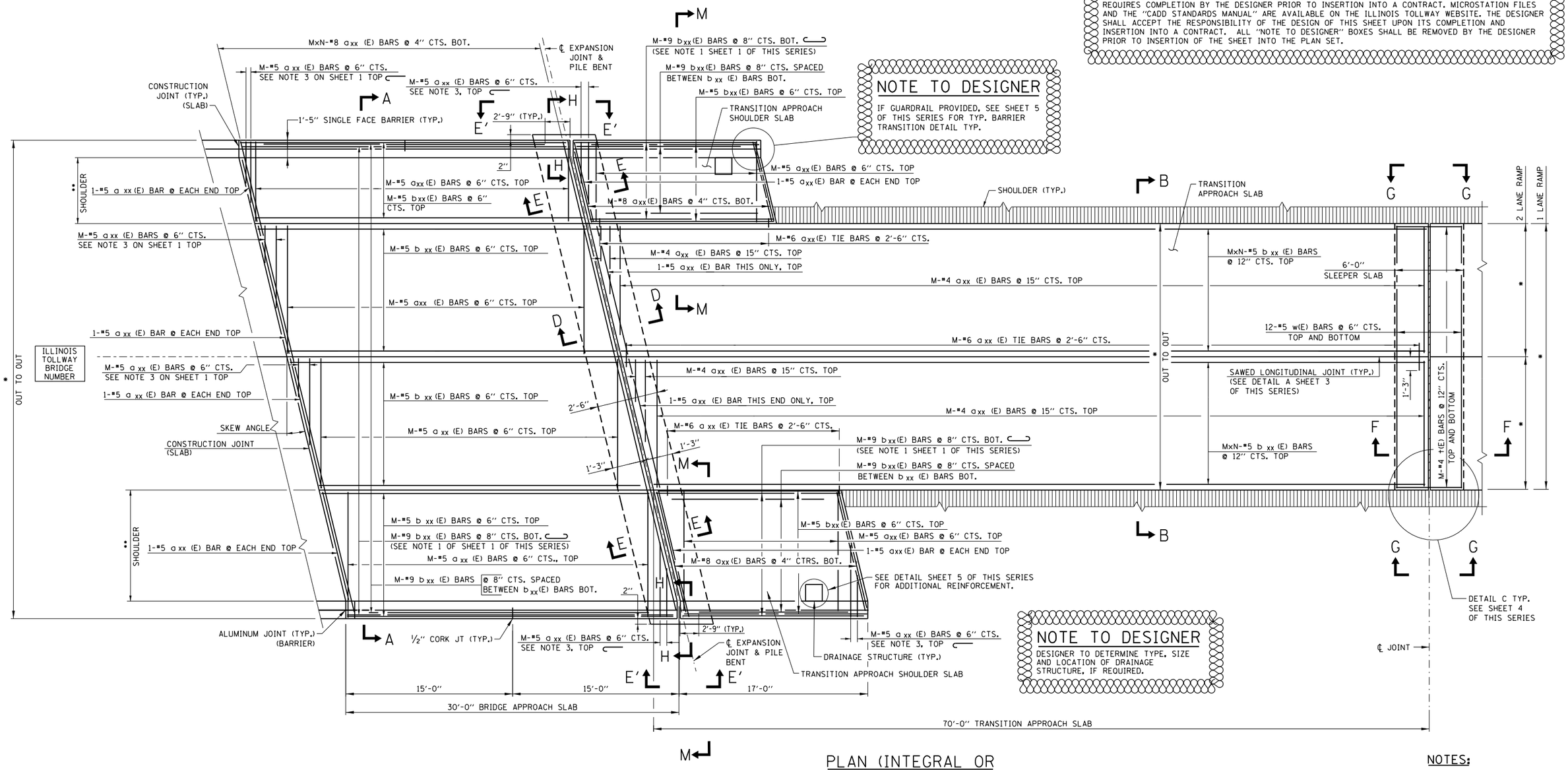

PLAN (INTEGRAL OR SEMI-INTEGRAL ABUTMENTS)

NOTES:

1. FOR GENERAL NOTES SEE SHEET 1 OF THIS SERIES.

NOTE TO DESIGNER

TRANSITION APPROACH SLAB SHALL REQUIRE SPECIAL DESIGN IF ADJACENT ROADWAY PAVEMENT IS CONTINUOUSLY REINFORCED CONCRETE (CRC.)

NOTE TO DESIGNER

DESIGNER SHALL REPLACE BAR MARK CALLOUTS DESIGNATED a_{xx}(E) THROUGH s_{xx}(E) WITH ACTUAL BAR MARKS. DESIGNER SHALL REPLACE "M" CALL OUT WITH ACTUAL NUMBER OF BARS IN DIMENSION LINE.

NOTE TO DESIGNER

* DIMENSIONS SHALL CONFORM WITH APPROACH ROADWAY.

** APPROACH SLAB SHOULDER WIDTH SHOULD BE ROADWAY SHOULDER WIDTH + 1'-0" FOR GUARDRAIL OR + 2'-0" FOR SINGLE FACE BARRIER SO APPROACH ROADWAY FLOW LINE MATCHES BARRIER BASE.

Illinois Tollway

APPROACH SLAB, RAMP

DATE
03-01-2021

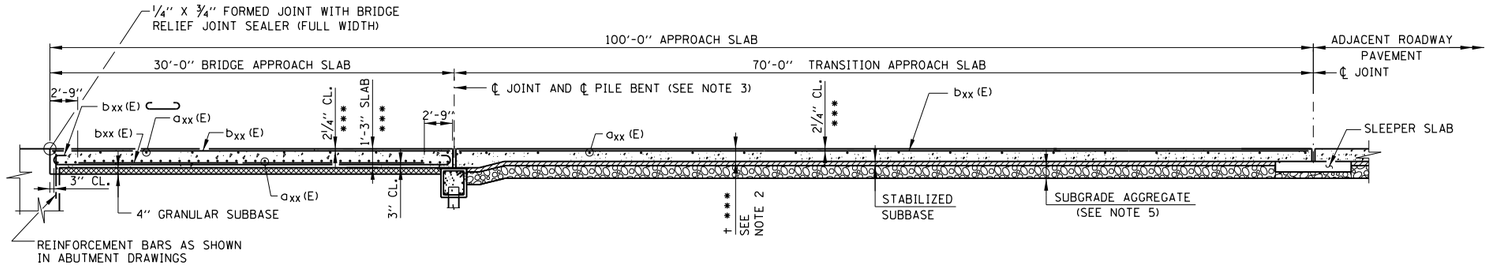

LONGITUDINAL CROSS SECTION

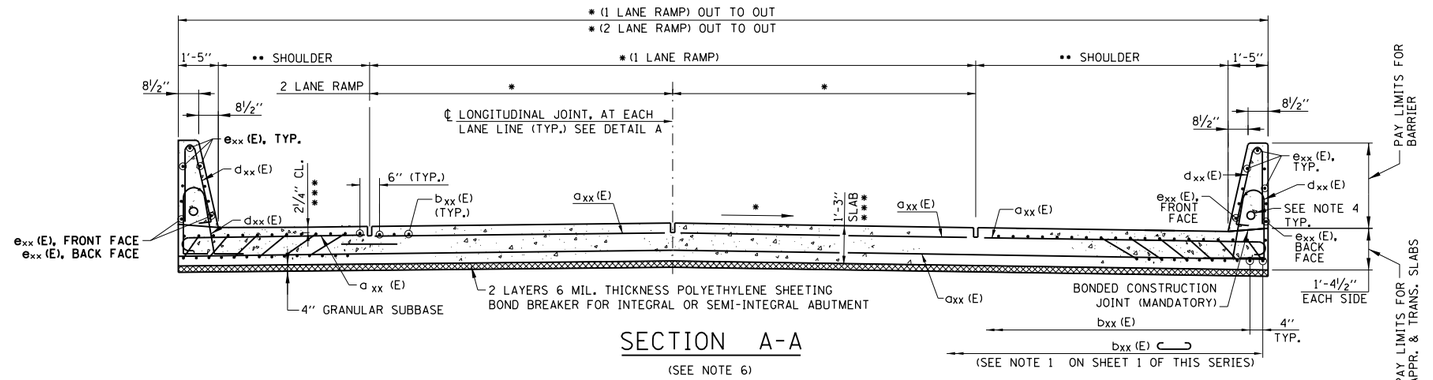

SECTION A-A

(SEE NOTE 6)

NOTE TO DESIGNER

DESIGNER SHALL REPLACE BAR MARK CALLOUTS DESIGNATED a_{xx}(E) THROUGH s_{xx}(E) WITH ACTUAL BAR MARKS. DESIGNER SHALL REPLACE "M" CALL OUT WITH ACTUAL NUMBER OF BARS IN DIMENSION LINE.

NOTE TO DESIGNER

IF GUARDRAIL PROVIDED, SEE SHEET 5 OF THIS SERIES FOR TYP. BARRIER TRANSITION DETAIL

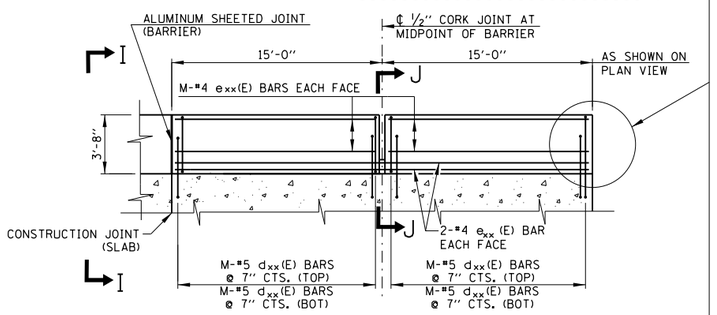

APPROACH SLAB BARRIER ELEVATION

(INTEGRAL OR SEMI-INTEGRAL)

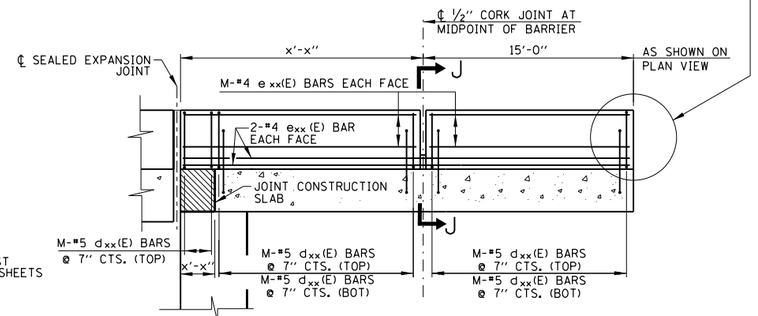

APPROACH SLAB BARRIER ELEVATION

(NON-INTEGRAL))

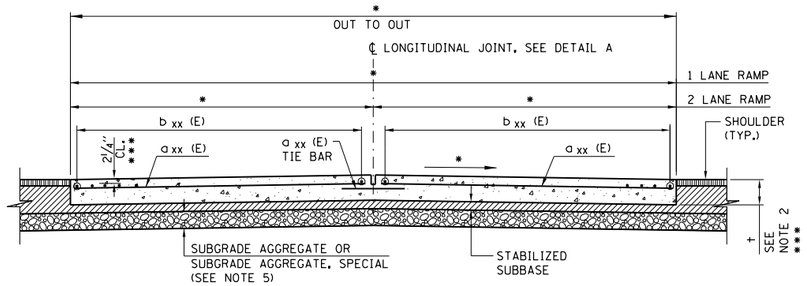

SECTION B-B

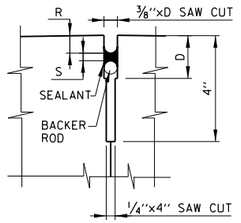

DETAIL E

NOTE:
DIMENSIONS D, R & S ARE AS RECOMMENDED BY THE SEALANT MANUFACTURER.

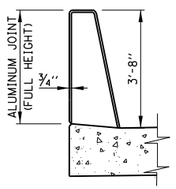

SECTION I-I

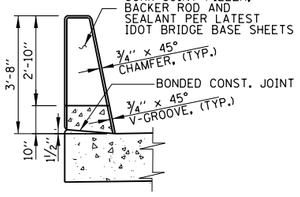

SECTION J-J

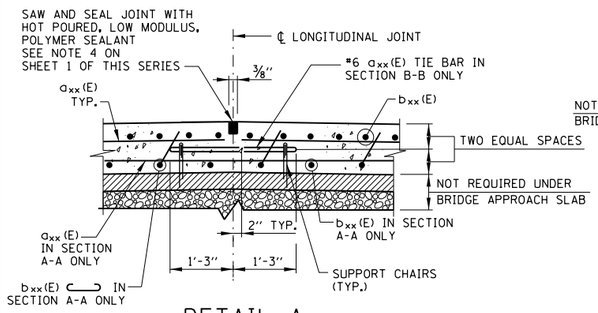

DETAIL A
TYPICAL LONGITUDINAL JOINT

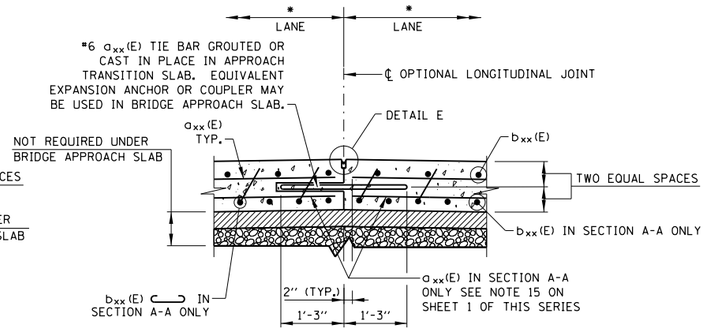

DETAIL A
OPTIONAL LONGITUDINAL JOINT

(SEE NOTE 17 ON SHEET 1 OF THIS SERIES)

NOTES:

1. SEE SHEET 1 OF THIS SERIES FOR GENERAL NOTES.
2. THE DIMENSION † IS THE THICKNESS OF THE TRANSITION APPROACH SLAB AS DEFINED IN THE ROADWAY PLANS.
3. INTEGRAL ABUTMENT JOINT SHOWN NON-INTERGRAL ABUTMENT JOINT SIMILAR. SEE SHEET 4 OF THIS SERIES.
4. COORDINATE NEED FOR 2" PVC CONDUIT WITH ELECTRICAL AND ITS PLANS. CONDUIT SHALL BE PLACED TO MISS REINFORCEMENT. DO NOT CUT REINFORCEMENT BARS.
5. THE THICKNESS OF THE STABILIZED SUBBASE AND SUBGRADE AGGREGATE SHALL BE THE SAME AS FOR THE ADJACENT PAVEMENT SECTIONS.
6. IF THE CONTRACTOR ELECTS TO SLIPFORM THE PARAPET THEN THE PARAPET CROSS-SECTIONAL AREA, PARAPET REINFORCEMENT BARS CLEARANCES AND THE APPROACH SLAB REINFORCEMENT BARS SHALL BE REVISED ACCORDINGLY TO ACCOUNT FOR THE ADDITIONAL SLAB WIDTH TO ALLOW SLIPFORM.
7. THE ⅛" ALUMINUM SHEET SHALL BE ASTM B 209 ALLOY 3003-H14 AND COATED TO MINIMIZE REACTION WITH WET CONCRETE.

NOTE TO DESIGNER

* DIMENSIONS SHALL CONFORM WITH APPROACH ROADWAY.

** APPROACH SLAB SHOULDER WIDTH SHOULD BE ROADWAY SHOULDER WIDTH + 1'-0" FOR GUARDRAIL OR + 2'-0" FOR SINGLE FACE BARRIER SO APPROACH ROADWAY FLOW LINE MATCHES BARRIER BASE.

*** INCREASE BY ¼" FOR SMOOTHNESS GRINDING

THIS BASE SHEET SHOWS TYPICAL NEW CONSTRUCTION BUT IT IS NOT A STANDARD DRAWING. IT REQUIRES COMPLETION BY THE DESIGNER PRIOR TO INSERTION INTO A CONTRACT. MICROSTATION FILES AND THE "CADD STANDARDS MANUAL" ARE AVAILABLE ON THE ILLINOIS TOLLWAY WEBSITE. THE DESIGNER SHALL ACCEPT THE RESPONSIBILITY OF THE DESIGN OF THIS SHEET UPON ITS COMPLETION AND INSERTION INTO A CONTRACT. ALL "NOTE TO DESIGNER" BOXES SHALL BE REMOVED BY THE DESIGNER PRIOR TO INSERTION OF THE SHEET INTO THE PLAN SET.

Illinois Tollway

APPROACH SLAB, RAMP

DATE
03-01-2021

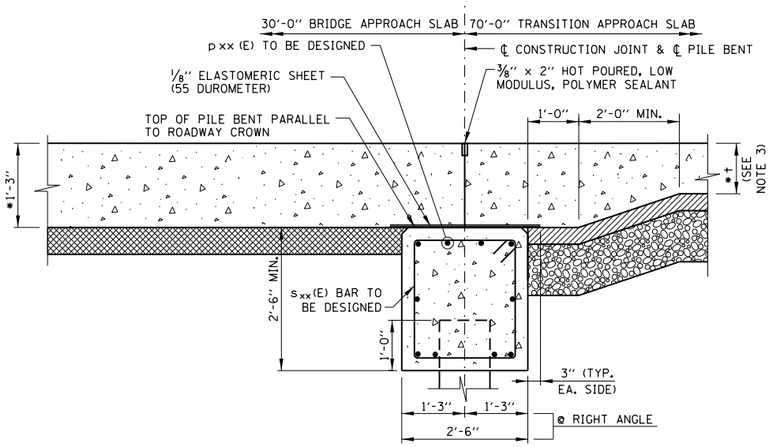

SECTION C-C
FOR NON-INTEGRAL ABUTMENT

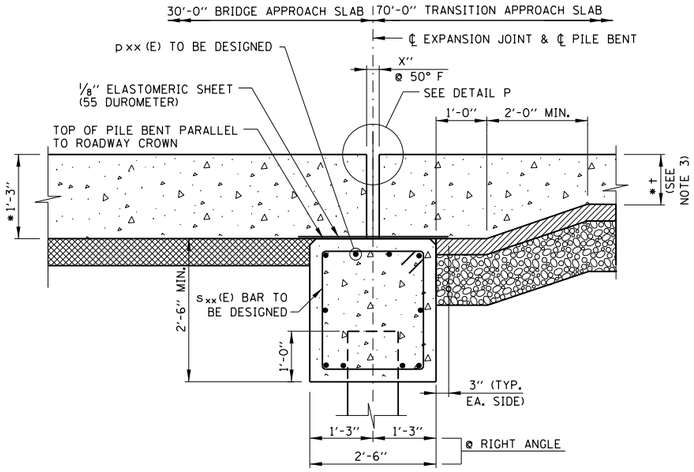

SECTION D-D
FOR INTEGRAL & SEMI-INTEGRAL ABUTMENT

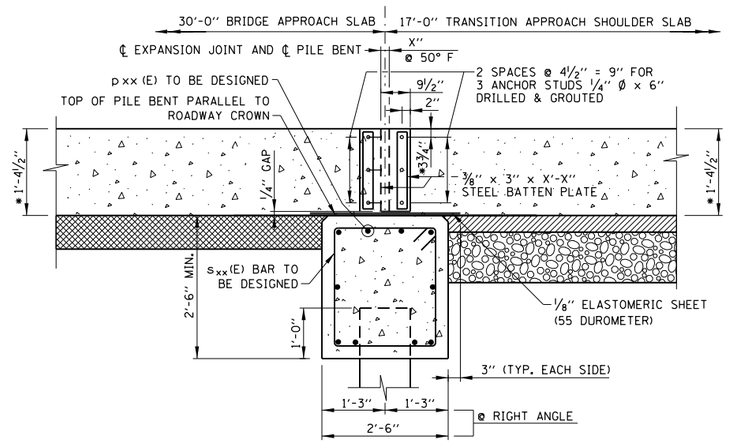

VIEW E'-E'
END ELEVATION OF EXPANSION JOINT

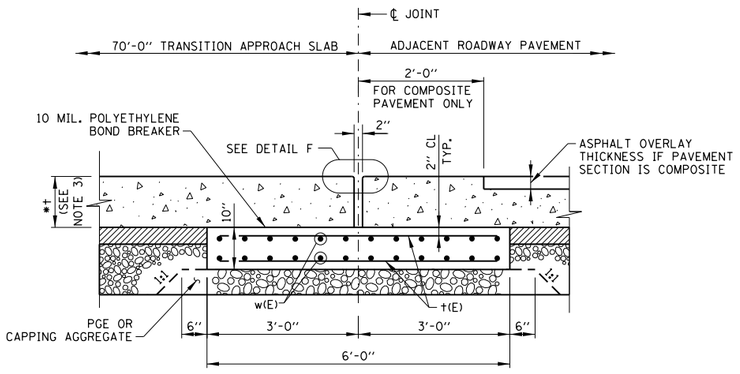

SECTION F-F

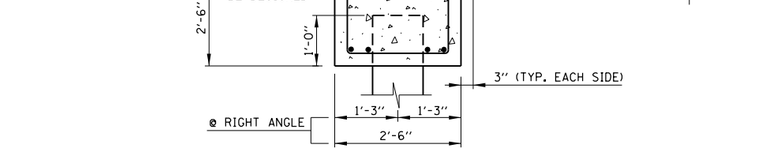

SECTION E-E

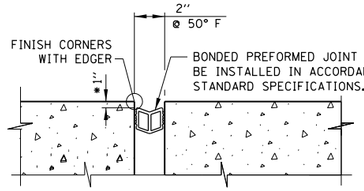

DETAIL F
TRANSITION JOINT

NOTE TO DESIGNER

- INCREASE BY 1/4" FOR SMOOTHNESS GRINDING

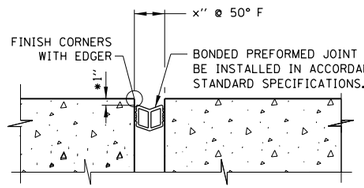

DETAIL P
APPROACH & TRANSITION JOINT

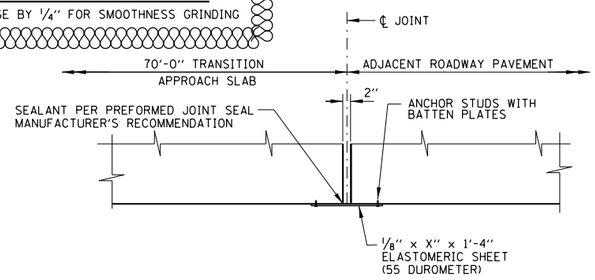

DETAIL C
END PLAN OF JOINT

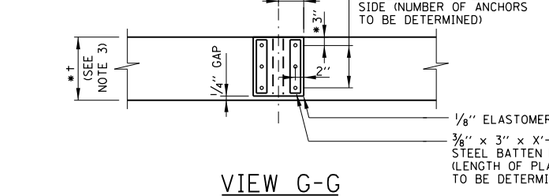

VIEW G-G
END ELEVATION OF JOINT

NOTE TO DESIGNER

DESIGNER TO PROVIDE JOINT SIZE AND OPENING CONSISTENT WITH BRIDGE AND APPROACH CONTRIBUTING LENGTH. DESIGNER TO DETERMINE NUMBER OF ANCHORS AND SIZE OF BATTEN PLATE.

NOTE TO DESIGNER

DESIGNER SHALL REPLACE BAR MARK CALLOUTS DESIGNATED a_{xx}(E) THROUGH s_{xx}(E) WITH ACTUAL BAR MARKS. DESIGNER SHALL REPLACE "M" CALL OUT WITH ACTUAL NUMBER OF BARS IN DIMENSION LINE.

NOTE TO DESIGNER

THIS BASE SHEET SHOWS TYPICAL NEW CONSTRUCTION BUT IT IS NOT A STANDARD DRAWING. IT REQUIRES COMPLETION BY THE DESIGNER PRIOR TO INSERTION INTO A CONTRACT. MICROSTATION FILES AND THE "CADD STANDARDS MANUAL" ARE AVAILABLE ON THE ILLINOIS TOLLWAY WEBSITE. THE DESIGNER SHALL ACCEPT THE RESPONSIBILITY OF THE DESIGN OF THIS SHEET UPON ITS COMPLETION AND INSERTION INTO A CONTRACT. ALL "NOTE TO DESIGNER" BOXES SHALL BE REMOVED BY THE DESIGNER PRIOR TO INSERTION OF THE SHEET INTO THE PLAN SET.

LEGEND

- CONCRETE
- STABILIZED SUBBASE
- SUBGRADE AGGREGATE OR SUBGRADE AGGREGATE, SPECIAL
- GRANULAR SUBBASE

NOTES:

1. IN SECTION E'-E' AND VIEW G-G, ANCHOR STUDS SHALL BE INSTALLED IN ACCORDANCE WITH ARTICLE 1006.09 OF THE STANDARD SPECIFICATIONS. STEEL PLATES, ANCHOR STUDS, NUTS AND WASHERS SHALL BE GALVANIZED.
2. THE THICKNESSES OF STABILIZED SUBBASE AND SUBGRADE AGGREGATE SHALL BE THE SAME AS FOR THE ADJACENT PAVEMENT SECTIONS.
3. THE DIMENSION † IS THE THICKNESS OF THE TRANSITION APPROACH SLAB AS DEFINED IN THE ROADWAY PLANS.
4. FOR PILE BENT DETAILS AND QUANTITIES SEE SHEET XX.
5. FOR GENERAL NOTES SEE SHEET 1 OF THIS SERIES.

Illinois Tollway

APPROACH SLAB, RAMP

DATE
3-31-2021

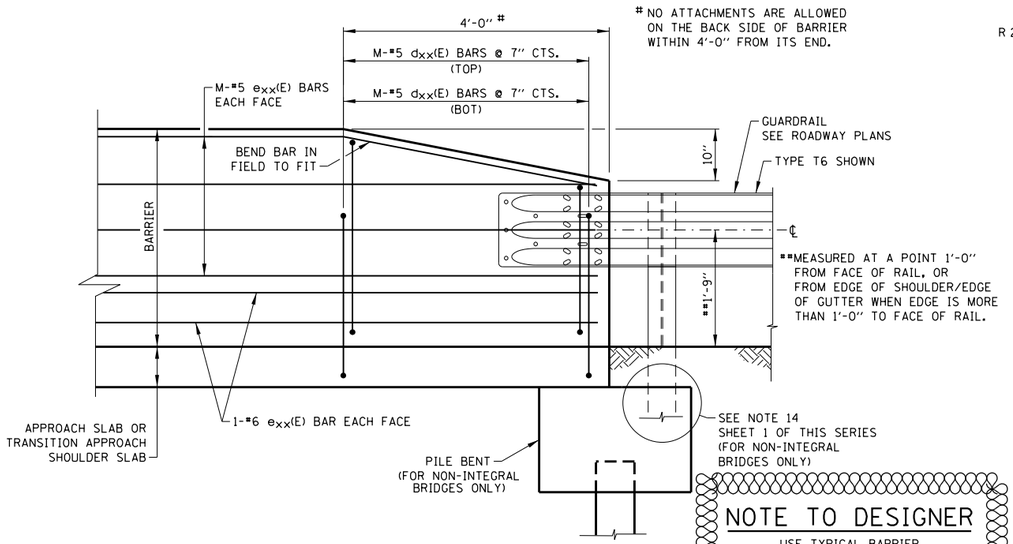

NO ATTACHMENTS ARE ALLOWED ON THE BACK SIDE OF BARRIER WITHIN 4'-0" FROM ITS END.

** MEASURED AT A POINT 1'-0" FROM FACE OF RAIL, OR FROM EDGE OF SHOULDER/EDGE OF GUTTER WHEN EDGE IS MORE THAN 1'-0" TO FACE OF RAIL.

TYPICAL BARRIER TRANSITION DETAIL

(CURB AND GUTTER NOT SHOWN FOR CLARITY)

NOTE TO DESIGNER

USE TYPICAL BARRIER TRANSITION DETAIL AS REQUIRED

NOTE TO DESIGNER

* DIMENSIONS SHALL CONFORM WITH APPROACH ROADWAY.

** APPROACH SLAB SHOULDER WIDTH SHOULD BE ROADWAY SHOULDER WIDTH + 1'-0" FOR GUARDRAIL OR + 2'-0" FOR SINGLE FACE BARRIER SO APPROACH ROADWAY FLOW LINE MATCHES BARRIER BASE.

NOTE TO DESIGNER

QUANTITIES FOR BRIDGE DECK GROOVING SHALL INCLUDE BOTH TRANSITION AND APPROACH SLABS. LIMITS ARE TRAVEL LANES ONLY.

NOTE TO DESIGNER

QUANTITIES FOR DIAMOND GRINDING, IF APPLICABLE, INCLUDE TRANSITION, TRANSITION APPROACH SHOULDER AND APPROACH SLAB. LIMITS ARE THE FULL WIDTH LESS 2FT AT EACH PARAPET.

NOTE TO DESIGNER

DESIGNER SHALL REPLACE BAR MARK CALLOUTS DESIGNATED axx(E) THROUGH sxx(E) WITH ACTUAL BAR MARKS. DESIGNER SHALL REPLACE "M" CALL OUT WITH ACTUAL NUMBER OF BARS IN DIMENSION LINE.

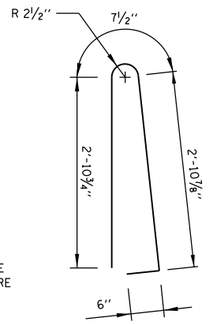

BAR dxx(E)

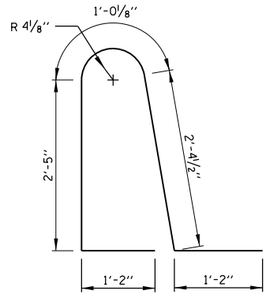

BAR dxx(E)

NOTE TO DESIGNER

***** SELECT APPLICABLE PAY ITEM TO MATCH THE BRIDGE

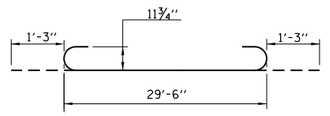

BARS bxx (E)

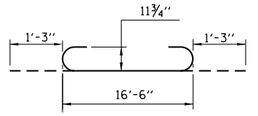

BARS bxx (E)

NOTE TO DESIGNER

*** INCREASE BY ¼" FOR SMOOTHNESS GRINDING

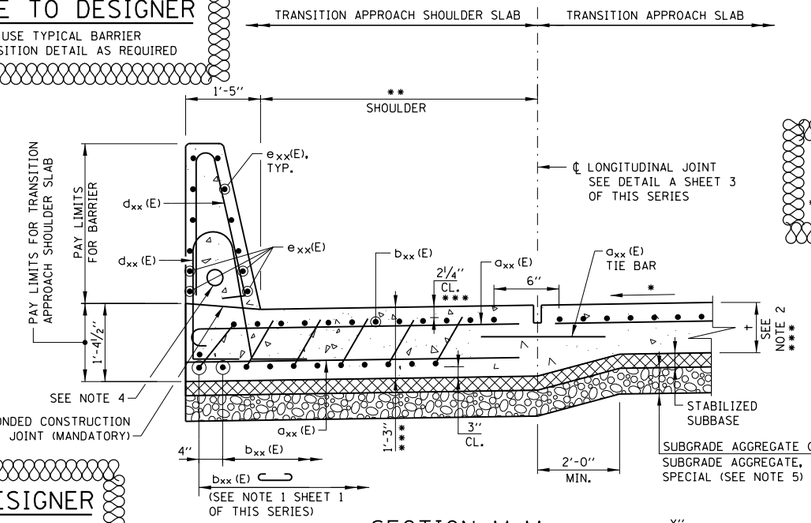

SECTION M-M

(SEE NOTE 6)

BARS axx (E)

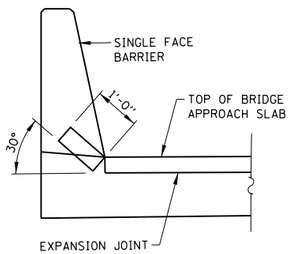

SECTION H-H

NOTE TO DESIGNER

IF GUARDRAIL PROVIDED, SEE TYP. BARRIER TRANSITION DETAIL.

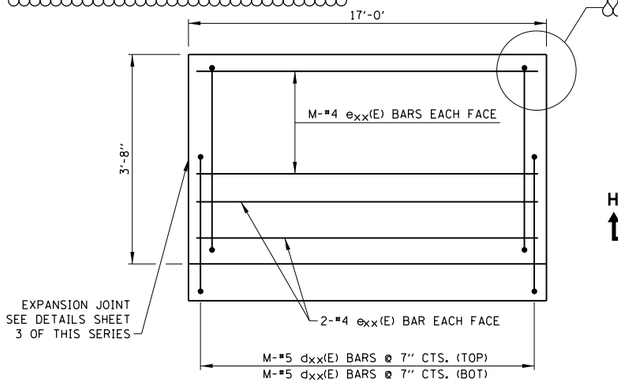

TRANSITION APPROACH SHOULDER SLAB BARRIER ELEVATION

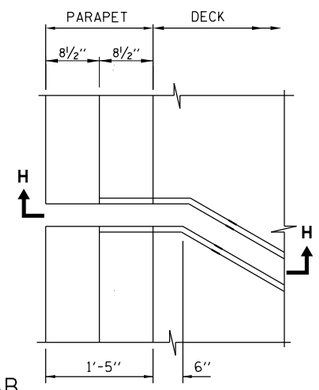

PLAN OF JOINT AT BARRIER

(FOR SKEWS GREATER THAN OR EQUAL TO 10 DEGREES)

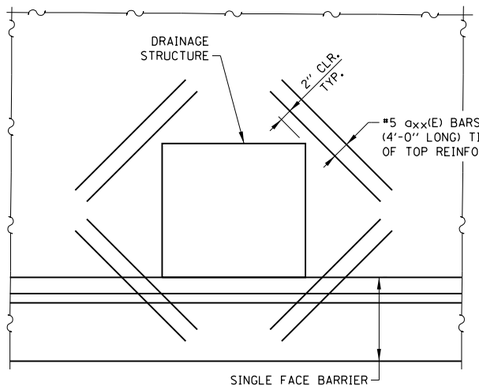

ADDITIONAL REINFORCEMENT AT DRAINAGE STRUCTURES

CUT TRANSVERSE axx(E) BARS AND LONGITUDINAL bxx(E) BARS IN SLAB TO CLEAR DRAINAGE STRUCTURE. RESPACE dxx(E) BARS TO MISS DRAINAGE STRUCTURE.

NOTE TO DESIGNER

NOTE TO DESIGNER

THIS BASE SHEET SHOWS TYPICAL NEW CONSTRUCTION BUT IT IS NOT A STANDARD DRAWING. IT REQUIRES COMPLETION BY THE DESIGNER PRIOR TO INSERTION INTO A CONTRACT. MICROSTATION FILES AND THE "CADD STANDARDS MANUAL" ARE AVAILABLE ON THE ILLINOIS TOLLWAY WEBSITE. THE DESIGNER SHALL ACCEPT THE RESPONSIBILITY OF THE DESIGN OF THIS SHEET UPON ITS COMPLETION AND INSERTION INTO A CONTRACT. ALL "NOTE TO DESIGNER" BOXES SHALL BE REMOVED BY THE DESIGNER PRIOR TO INSERTION OF THE SHEET INTO THE PLAN SET.

BILL OF MATERIAL FOR APPROACH AND TRANSITION SLABS

BAR	NO.	SIZE	LENGTH	SHAPE
axx(E)				—
axx(E)				⊂
bxx(E)		#9	32'-0"	⊂⊃
bxx(E)		#9	19'-0"	⊂⊃
dxx(E)		#5	8'-2"	⊂
t(E)		#4	5'-8"	—
w(E)		#5		—

PAY ITEM NO.	DESCRIPTION	UNIT	QUANTITY
50300260	BRIDGE DECK GROOVING	SQ. FT.	
50300300	PROTECTIVE COAT	SQ. YD.	
JI420040	BRIDGE APPROACH SLAB	SQ. YD.	
JI420041	TRANSITION APPROACH SLAB	SQ. YD.	
JI420046	TRANSITION APPROACH SHOULDER SLAB	SQ. YD.	
JS503160	DIAMOND GRINDING AND SURFACE SMOOTHNESS FOR BRIDGE SECTIONS	SQ. YD.	
JT421510	SLEEPER SLAB	SQ. YD.	
***** JT525125	BONDED PREFORMED JOINT SEAL, 2 IN.	FT.	
***** X5030250	BRIDGE DECK GROOVING (LONGITUDINAL)	SQ. FT.	
*	REINFORCEMENT BARS, EPOXY COATED	LBS.	

* FOR INFORMATION ONLY

BILL OF MATERIAL FOR BARRIERS

BAR	NO.	SIZE	LENGTH	SHAPE
dxx(E)		#5	6'-10"	▱
exx(E)				

PAY ITEM NO.	DESCRIPTION	UNIT	QUANTITY
50300255	CONCRETE SUPERSTRUCTURE	CU. YD.	
50800205	REINFORCEMENT BARS, EPOXY COATED	LBS.	
50300300	PROTECTIVE COAT	SQ. YD.	

NOTE TO DESIGNER

•••• ADD PAY ITEM FOR OTHER JOINT SIZES AS APPLICABLE

NOTES:

1. THE AREA OF EACH BRIDGE APPROACH SLAB, TRANSITION APPROACH SLAB AND TRANSITION APPROACH SHOULDER SLAB WILL BE MEASURED IN PLACE AND COMPUTED IN SQUARE YARDS. SEE SPECIAL PROVISIONS FOR OTHER WORK THAT IS INCLUDED IN THE COST OF THIS ITEM.
2. THE DIMENSION t IS THE THICKNESS OF THE TRANSITION APPROACH SLAB AS DEFINED IN THE ROADWAY PLANS.
3. FOR GENERAL NOTES SEE SHEET 1 OF THIS SERIES.
4. COORDINATE NEED FOR 2" PVC CONDUIT WITH ELECTRICAL AND ITS PLANS. CONDUIT SHALL BE PLACED TO MISS REINFORCEMENT. DO NOT CUT REINFORCEMENT BARS.
5. THE THICKNESS OF THE STABILIZED SUBBASE AND SUBGRADE AGGREGATE SHALL BE THE SAME AS FOR THE ADJACENT PAVEMENT SECTIONS.
6. IF THE CONTRACTOR ELECTS TO SLIPFORM THE PARAPET THEN THE PARAPET CROSS-SECTIONAL AREA, PARAPET REINFORCEMENT BARS CLEARANCES AND THE APPROACH SLAB REINFORCEMENT BARS SHALL BE REVISED ACCORDINGLY TO ACCOUNT FOR THE ADDITIONAL SLAB WIDTH TO ALLOW SLIPFORM.

Illinois Tollway

APPROACH SLAB, RAMP

DATE
3-01-2021

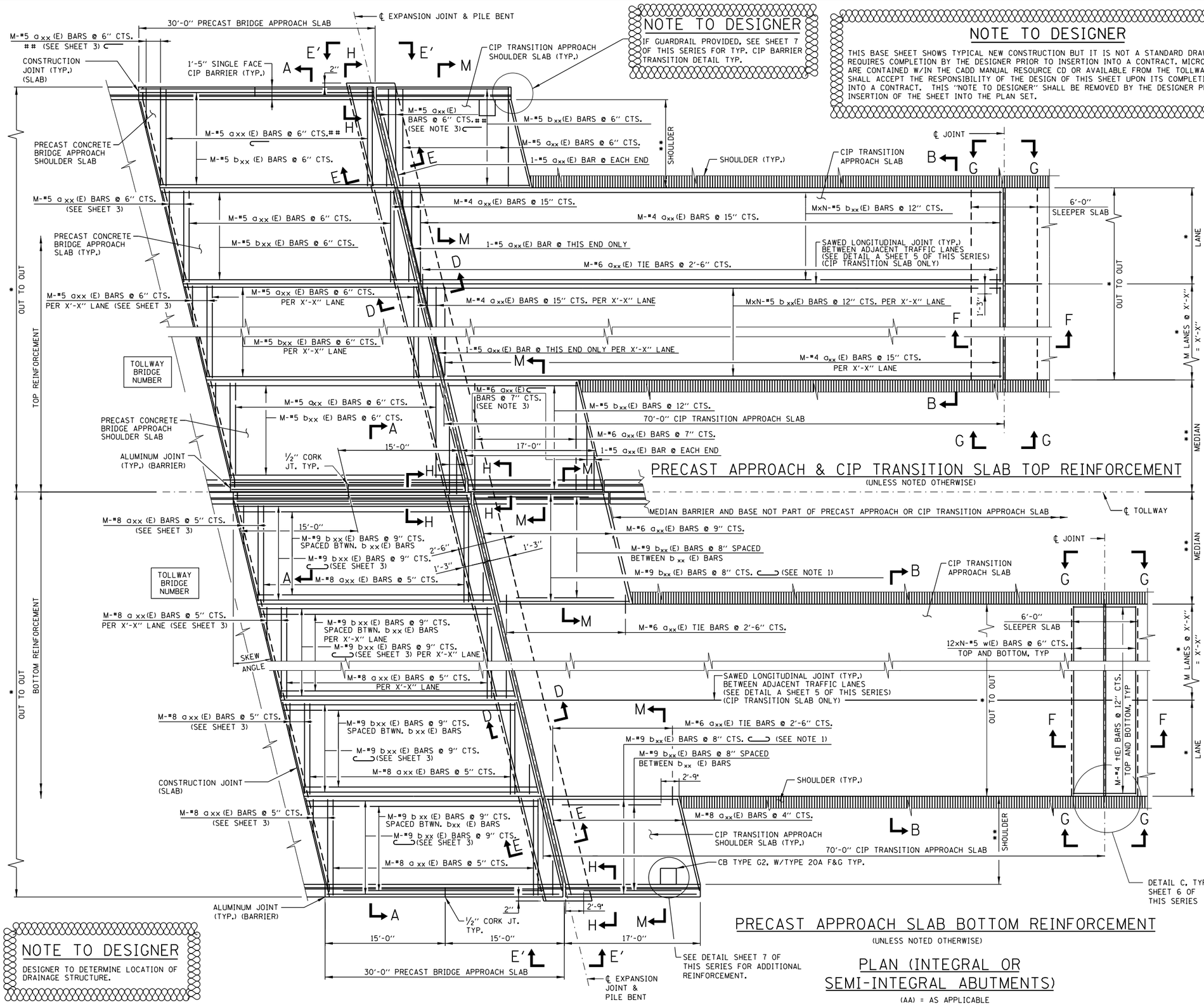

PRECAST APPROACH & CIP TRANSITION SLAB TOP REINFORCEMENT

(UNLESS NOTED OTHERWISE)

PRECAST APPROACH SLAB BOTTOM REINFORCEMENT

(UNLESS NOTED OTHERWISE)

PLAN (INTEGRAL OR SEMI-INTEGRAL ABUTMENTS)

(AA) = AS APPLICABLE

NOTE TO DESIGNER

IF GUARDRAIL PROVIDED, SEE SHEET 7 OF THIS SERIES FOR TYP. CIP BARRIER TRANSITION DETAIL TYP.

NOTE TO DESIGNER

THIS BASE SHEET SHOWS TYPICAL NEW CONSTRUCTION BUT IT IS NOT A STANDARD DRAWING. IT REQUIRES COMPLETION BY THE DESIGNER PRIOR TO INSERTION INTO A CONTRACT. MICROSTATION FILES ARE CONTAINED W/IN THE CADD MANUAL RESOURCE CD OR AVAILABLE FROM THE TOLLWAY. THE DESIGNER SHALL ACCEPT THE RESPONSIBILITY OF THE DESIGN OF THIS SHEET UPON ITS COMPLETION & INSERTION INTO A CONTRACT. THIS "NOTE TO DESIGNER" SHALL BE REMOVED BY THE DESIGNER PRIOR TO INSERTION OF THE SHEET INTO THE PLAN SET.

NOTE TO DESIGNER

DESIGNER SHALL REPLACE BAR MARK CALLOUTS DESIGNATED a_{xx}(E) THROUGH S_{xx}(E) WITH ACTUAL BAR MARKS. DESIGNER SHALL REPLACE "M" CALL OUT WITH ACTUAL NUMBER IN DIMENSION LINE.

NOTES:

1. TILT HOOK OF #9 BARS FOR MINIMUM 3½" CLEARANCE.
2. USE 2'-6" MIN. LAP FOR #4 BARS. USE 3'-1" MIN. LAP FOR #5 BARS. USE 3'-8" MIN. LAP FOR # 6 BAR.
3. CUT REINFORCEMENT IN FIELD TO FIT THE SKEW AND USE REMAINDER IN OPPOSITE END IN CIP TRANSITION APPROACH SHOULDER SLAB. PAINT EXPOSED ENDS WITH EPOXY PAINT.
4. FOR PRECAST SLAB DETAILS SEE SHEETS 2 THRU 4 OF THIS SERIES. FOR CIP DETAILS SEE SHEETS 5 THRU 7 OF THIS SERIES.
5. PROTECTIVE COAT SHALL BE APPLIED TO TOP AND TRAFFIC FACES OF BARRIERS.
6. TOOL EDGES OF EXPANSION JOINTS TO ¼" RADIUS.
7. EXPOSED CONCRETE EDGES SHALL HAVE ¾" x 45° CHAMFERS. CHAMFERS ON VERTICAL EDGES SHALL BE CONTINUED A MINIMUM OF ONE FOOT BELOW GROUND LEVEL.
8. CONCRETE BARRIERS SHALL BE CONSTRUCTED & PAID FOR IN ACCORDANCE WITH SECTIONS 503 AND 508 OF THE STANDARD SPECIFICATIONS.
9. EXPANSION ANCHORS AND DRILLED AND GROUTED DOWELS SHALL CONFORM TO THE STANDARD SPECIFICATIONS.
10. SEE SPECIAL PROVISIONS, PRECAST CONCRETE BRIDGE APPROACH SLABS. TRANSITION APPROACH SLAB AND BONDED PREFORMED JOINT SEAL.
11. FOR PRECAST APPROACH SLAB FABRICATION NOTES SEE SHEET 2.

NOTE TO DESIGNER

USE #7 axx(E) HOOKED BARS AT 5" SPACING FOR TOP TRANSVERSE BARS OVER SHOULDER WHEN THE BARRIER HEIGHT IS 72".

NOTE TO DESIGNER

* DIMENSIONS SHALL CONFORM WITH APPROACH ROADWAY.

** APPROACH SLAB SHOULDER WIDTH SHOULD BE ROADWAY SHOULDER WIDTH + 1'-0" FOR GUARDRAIL OR + 2'-0" FOR SINGLE FACE BARRIER SO THAT APPROACH ROADWAY FLOW LINE MATCHES BARRIER BASE.

NOTE TO DESIGNER

DESIGNER TO DETERMINE LOCATION OF DRAINAGE STRUCTURE.

SHEET 1 OF 7
BASE SHEET M-RDY-410

Illinois Tollway

PRECAST APPROACH SLAB W/CIP TRANSITION SLAB

DATE
03-01-2021

PRECAST SLAB DATA													
LANE TYPE	VARIABLES			AC (FT.)	BD (FT.)	T.O.S. ELEV. A	T.O.S. ELEV. B	T.O.S. ELEV. C	T.O.S. ELEV. D	AREA (S.F.)	VOLUME (C.F.)	WEIGHT (TONS)	NO.
	SKEW ANGLE (DEG)	M (NO.)	N (NO.)										
MEDIAN													
LANE													
LANE													
SHOULDER													

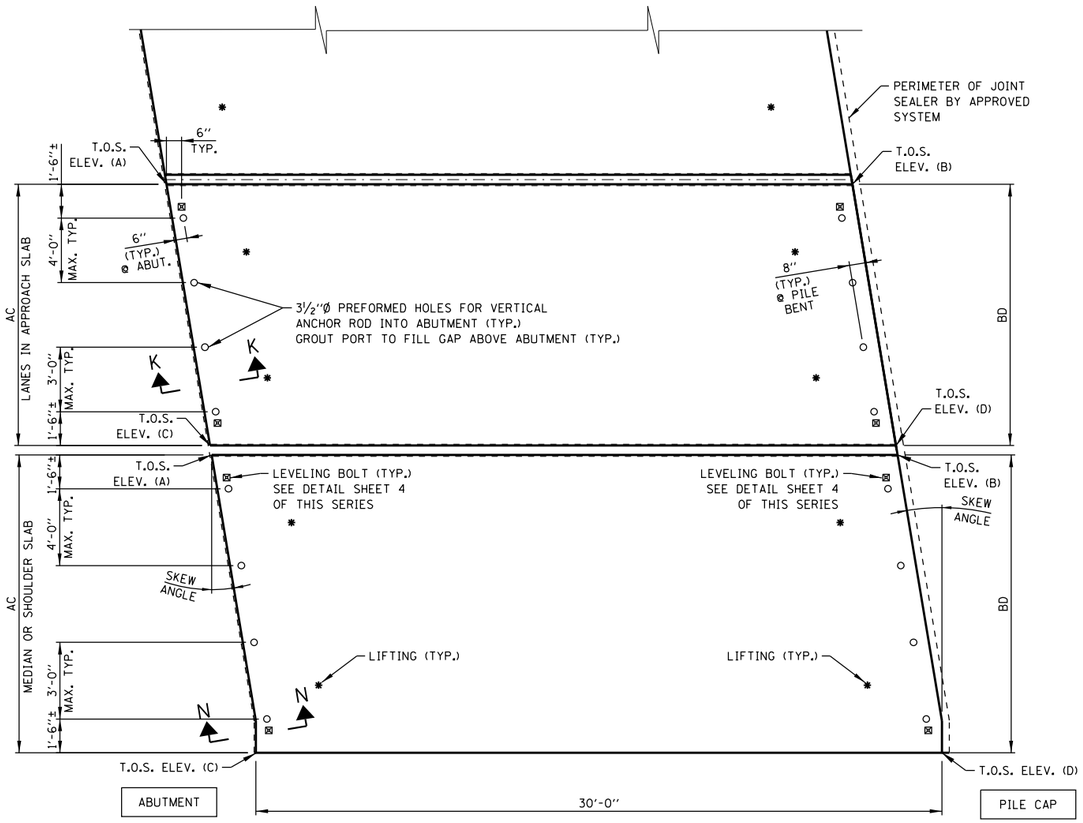

PRECAST BRIDGE APPROACH SLAB LAYOUT

NOTE TO DESIGNER

FILL IN TABLE FOR SLABS IN PRECAST APPROACH SLAB. IF DIMENSION IS NOT REQUIRED ENTER "N/A".

NOTE TO DESIGNER

PRECAST PANEL WIDTH SHALL SATISFY THE FOLLOWING:

1. PANELS FOR LANES SHALL BE FULL WIDTH

2. ADDITIONAL LONGITUDINAL CONSTRUCTION JOINT SHALL NOT BE IN THE WHEEL PATH FOR THE FLEX LANE OR SHOULDER. MINIMUM PANEL WIDTH SHALL BE 6 FEET IN THE SHOULDER AREA.

3. PANEL CLOSEST TO THE BARRIER SHALL BE THE LARGER PANEL.

4. DESIGNER SHALL VERIFY MAXIMUM PRECAST PANEL WIDTH FOR TRANSPORTATION AND AN ADDITIONAL JOINT SHALL BE SHOWN ON THE PLANS FOR THE SHOULDER AREA MEETING THE ABOVE REQUIREMENTS.

NOTE TO DESIGNER

THE DESIGNER IS TO INDICATE IF THE SLAB IS PLANAR OR NON-PLANAR, CURVED OR STRAIGHT. IF CURVED SHOW RADII

NOTE TO DESIGNER

THIS BASE SHEET SHOWS TYPICAL NEW CONSTRUCTION BUT IT IS NOT A STANDARD DRAWING. IT REQUIRES COMPLETION BY THE DESIGNER PRIOR TO INSERTION INTO A CONTRACT. MICROSTATION FILES ARE CONTAINED W/IN THE CADD MANUAL RESOURCE CD OR AVAILABLE FROM THE TOLLWAY. THE DESIGNER SHALL ACCEPT THE RESPONSIBILITY OF THE DESIGN OF THIS SHEET UPON ITS COMPLETION & INSERTION INTO A CONTRACT. THIS "NOTE TO DESIGNER" SHALL BE REMOVED PRIOR TO INSERTION OF THE SHEET INTO THE PLAN SET.

FABRICATION GENERAL NOTES

MATERIALS:

1. EPOXY COATED DOWEL BARS USED SHALL COMPLY WITH ASTM A 615 GRADE 60.

2. ALL EMBEDDED LIFTING HARDWARE USED SHALL BE GALVANIZED.
   A. FOR LIFTING INSERTS, INSTALLATION SHALL BE IN ACCORDANCE WITH THE MANUFACTURER'S SPECIFICATION INCLUDING MINIMUM EDGE DISTANCE AND SPACING REQUIREMENTS. UNLESS THE CONTRACTOR AND FABRICATOR WILL BE USING A LIFTING BEAM OR ROLLING SHEAVE TO ENSURE THAT EACH OF THE FOUR INSERTS WILL SHARE THE LOAD EQUALLY, TWO OF THE FOUR INSERTS SHALL BE CAPABLE OF CARRYING THE TOTAL LOAD WITH A 4:1 SAFETY FACTOR WHILE ADJUSTING FOR THE ANGLE OF THE CABLES AND THE STRENGTH OF THE CONCRETE OVER TIME. THE INSERT SHOULD BE RECESSED A MINIMUM OF 1½" UNLESS THE SLAB IS TO BE OVERLAID IMMEDIATELY AFTER PLACEMENT. THE INSERT SHALL LEAVE A MAXIMUM 1¼" DIAMETER THREADED HOLE TO BE GROUTED AFTER SLAB INSTALLATION. IF THE INSERT IS INSTALLED WITH A FULL SLAB PENETRATION, THE LIFTING INSERT CAN BE USED AS A BEDDING GROUT PORT AT THE CONTRACTOR'S DISCRETION.
   B. FOR LIFTING PLATES, INSTALLATION SHALL BE IN ACCORDANCE WITH THE MANUFACTURER'S SPECIFICATIONS AND HAVE A STANDARD 5:1 SAFETY FACTOR FOR LIFTING HARDWARE. UNLESS A LIFTING BEAM IS USED TO SPACE THE FOUR PICK POINTS DIRECTLY ABOVE THE INSERTS, THE LIFTING HARDWARE SHALL BE RATED FOR USE WITH CABLES AT AN ANGLE AND TWO OF THE FOUR DEVICES MUST BE CAPABLE OF LIFTING THE FULL LOAD AS WITH THE INSERTS REFERENCED IN THE PREVIOUS NOTE.

3. REINFORCEMENT USED SHALL BE EPOXY COATED, IN ACCORDANCE WITH ASTM A706 GRADE 60 AND IN COMPLIANCE WITH ARTICLE 1006.10 OF THE IDOT STANDARD SPECIFICATIONS.

4. CONCRETE COVER OVER REINFORCEMENT TO BE MAINTAINED USING WIRE OR THERMOPLASTIC CHAIRS OR SPACERS OR AN APPROVED EQUIVALENT.

5. ULTRA HIGH PERFORMANCE CONCRETE (UHPC) USED FOR LONGITUDINAL /TRANSVERSE JOINT, CLOSURE POUR, UNDERSLAB GAP AND LIFTING LOOP HOLES SHALL MEET THE SPECIAL PROVISIONS FOR ULTRA HIGH-PERFORMANCE CONCRETE (ILLINOIS TOLLWAY)

6. PRECAST ELEMENTS: HIGH PERFORMANCE CONCRETE SHALL CONFORM TO TOLLWAY SPECIAL PROVISION OF "PRECAST CONCRETE BRIDGE APPROACH SLABS (ILLINOIS TOLLWAY)" AND AS REQUIRED IN THE PLANS. SITE CASTING SHALL CONFORM TO THE SITE CASTING PROVISIONS LISTED IN THE PLANS AND MATERIALS MUST BE APPROVED BY THE ILLINOIS TOLLWAY MATERIAL ENGINEER PRIOR TO ANY CONCRETE CASTING.
   COMPRESSIVE STRENGTH OF PRECAST CONCRETE, f'c SHALL BE 5,000 PSI.
   COMPRESSIVE STRENGTH OF PRECAST CONCRETE DURING INITIAL LIFTING, f'ci SHALL BE 4,500 PSI.

7. POLYETHYLENE SHEET BOND BREAKER MATERIAL: PROVIDE LOW DENSITY POLYETHYLENE SHEET MEETING THE REQUIREMENTS OF ASTM D4635 THAT WILL ALLOW FOR SLIDING OF THE STRUCTURAL CONCRETE AFTER PLACEMENT. SUPPLY SHEETS THAT ARE A MINIMUM OF 6 MIL THICK UNLESS SHOWN OTHERWISE.

SLAB DESIGN:

8. GENERAL DESIGN REQUIREMENTS:

   A. USE SLAB DIMENSIONS SHOWN ON THESE DRAWINGS FOR DESIGN THICKNESS. LENGTHS AND WIDTHS OF EACH CUSTOM SLAB SHALL BE OF ACCURATE DIMENSIONS TO COMPLY WITH THE DESIGN AND PROFILE OF THE BRIDGE STRUCTURE, WHICH THE APPROACH SLAB IS DESIGNED FOR.

   B. FOR NON-PLANAR APPROACH SLABS, THE ELEVATIONS SHALL BE OBTAINED BY EITHER CASTING THE SLAB IN A NON-PLANAR FORM; OR BY CASTING THE SLAB PLANAR TO ALLOW FOR TOP SURFACE ELEVATIONS TO BE OBTAINED BY DIAMOND GRINDING AFTER PLACEMENT WHILE MINIMUM TOTAL SLAB THICKNESS AND MINIMUM CONCRETE COVER OVER REINFORCEMENT ARE SATISFIED.

9. MISCELLANEOUS DETAIL REQUIREMENTS:
   A. GROUT PORT HOLES SHALL BE LOCATED ON TRANSVERSE LINES ACROSS THE SLAB ABOVE THE ABUTMENT AND PILE CAP THAT ARE PARALLEL WITH EXISTING TRANSVERSE JOINTS. EACH PORT HOLE SHALL BE EVENLY DISTRIBUTED ON EACH LINE. THE DISTANCE BETWEEN BEDDING GROUT PORT HOLES SHALL NOT EXCEED 4'-0", WITH THE PORT HOLES AT THE END OF THE TRANSVERSE LINES TO BE NO LESS THAN 1'-6" AND NO MORE THAN 3'-0" OFF A LONGITUDINAL JOINT. THE TRANSVERSE LINES FOR PORT HOLES SHALL BE NO MORE THAN 4'-0" APART, AND NO MORE THAN 6" OFF OF A TRANSVERSE JOINT.
   B. RECESS LIFTING DEVICES 1 1/4" MINIMUM BELOW THE SURFACE OF THE SLAB TO ALLOW FOR A MINIMUM GROUT COVER OF 1" COVER AFTER MAXIMUM 1/4" DIAMOND GRINDING ON SLABS THAT WILL NOT BE OVERLAID.

FABRICATION:

PREPARE WORKING DRAWINGS THAT SHALL INCLUDE THE FOLLOWING INFORMATION:
- A. SLAB LAYOUT DRAWING FOR TYPICAL SLABS TO BE FABRICATED, WITH ACCURATE DIMENSIONS CITED.
- B. REINFORCEMENT SIZES, SPACING, NUMBER OF MATS. AND METHOD OF MAINTAINING CONCRETE COVER.
- C. SIZE AND LOCATION OF GROUT PORTS, LIFTING ANCHORS, AND GROUT SEAL GASKETS.
- D. COMPRESSIVE STRENGTH AT 28 DAYS AND AIR CONTENT OF CONCRETE.
- E. CONCRETE CURING METHOD TO BE USED.
- F. MARKING LEGEND FOR EACH SLAB TO INDICATE PRECAST MANUFACTURER, AND DATE OF PRODUCTION; AND FOR EACH CUSTOM SLAB TO INCLUDE CONTRACT NUMBER AND MARK NUMBER OF THE SLAB.
- G. WEIGHT OF EACH SLAB.

9. PERFORM A PRE-POUR INSPECTION OF THE FORMS TO CONFIRM THAT THEY ARE ASSEMBLED IN ACCORDANCE WITH THE FOLLOWING TOLERANCES:
   LENGTH AND WIDTH ± 1/8"
   DIAGONALS ± 3/16"
   DOWEL VARIANCE FROM LEVEL, SQUARENESS TO EDGE OF SLAB, AND LOCATION. ± 1/8"
   EDGE SQUARENESS 1"8" IN 10" (IN RELATION TO TOP AND BOTTOM SURFACES).
10. INCLUDE A 1 INCH CHAMFER ALONG ALL BOTTOM EDGES OF SLABS. AND A STONED EDGE TO ALL TOP EDGES OF THE SLAB.
11. THE EXPOSED SURFACES OF ALL PREFORMED SLOTS FOR DOWEL BARS SHALL BE SANDBLASTED. PLASTIC SLEEVES FOR ANCHOR BOLTS, GROUT PORTS SHALL BE CAST 1/4" LOWER THAN THE FINISHED TOP OF SLAB TO AVOID EXPOSURE AFTER DIAMOND GRINDING OR AN APPROVED METHOD OF CASTING SLEEVE INSTALLATION RESULTING IN THEIR REMOVAL AFTER SLAB IS CAST CAN BE USED.
12. AFTER REMOVAL OF FORMS AND ANY BLOCKOUTS, NO SPALLS OF THE FINISHED SURFACE WILL BE ALLOWED.
13. SHOP DRAWINGS SHALL BE REQUIRED FOR ALL SLABS.

SITE CASTING AND DEMONSTRATION PANEL FIT:

THE PRECAST FABRICATOR SHALL INITIALLY FABRICATE ONE FULL SET OF APPROACH PANELS AND ASSEMBLE THESE PANELS AT THE FABRICATION PLANT TO DEMONSTRATE THE FIT OF THE PANELS TO MATCH THE PROFILE GRADE AND CROSS SLOPES , SKEW OR CURVE AS PER VERIFIED FIELD SURVEYED MEASUREMENT TO THE SATISFACTION OF THE ENGINEER. THE PANELS SHALL BE ASSEMBLED OVER A LEVEL SURFACE THAT WILL NOT CAUSE DAMAGE TO THE PANELS DURING OR AFTER ASSEMBLY. JOINTS BETWEEN PANELS SHOULD BE WITH VERTICAL SIDES AND SHOULD NOT BE SPACED MORE THAN THE SPECIFIED GAP WHEN ASSEMBLED.
PANEL JOINT ALIGNMENT FOR THE OUTER SLABS UNDER THE PARAPET SHOULD BE VERIFIED TO MATCH PARAPET WALL ABOVE AS SHOWN ON THE CONSTRUCTION PLANS.
ANY PROBLEMS WITH FITTING THE PANELS CAUSED BY IMPERFECTIONS IN THE PANELS SHALL BE CORRECTED PRIOR TO PROCEEDING WITH PANEL FABRICATION. PANEL FABRICATION MAY COMMENCE FOLLOWING THE TRIAL ASSEMBLY ONLY UPON APPROVAL FROM THE ENGINEEER.

TRANSPORTATION:

PANELS SHALL BE TRANSPORTED IN SUCH A MANNER THAT THE PANEL WILL NOT BE DAMAGED DURING TRANSPORTATION AS PER ARTICLE 106.07 OF THE IDOT STANDARD SPECIFICTIONS. PLASTIC CORNER PIECES OR SHOCK-ABSORBING CUSHIONING MATERIAL SHALL BE USED AT ALL BEARING POINTS AND ALL EXPOSED CORNERS DURING TRANSPORTATION OF THE PRECAST ELEMENTS. PANELS SHALL BE PROPERLY SUPPORTED DURING TRANSPOTATION SUCH THAT CRACKING OR DEFORMATION (SAGGING) DOES NOT OCCUR. IF MORE THAN ONE PANEL IS TRANSPORTED PER VEHICLE, PROPER SUPPORT AND SEPARATION MUST BE PROVIDED BETWEEN THE INDIVIDUAL PANELS. PANELS SHALL BE LYING HORIZONTALLY DURING TRANSPORTATION, UNLESS OTHERWISE APPROVED.

PRECAST ELEMENTS DAMAGED DURING HANDLING AND STORAGE SHALL BE REPAIRED OR REPLACED AT NO COST TO THE ILLINOIS TOLLWAY.

A PRECAST ELEMENT SHALL NOT BE TRANSPORTED FROM THE CASTING YARD UNTIL THE MINMUM 28 DAY COMPRESSIVE STRENGTH SPECIFIED ON PROJECT PLANS HAS BEEN ATTAINED AS SHOWN BY TEST CYLINDER CURED IN ACCORDANCE WITH AASHTO T 23.

MATERIAL, QUALITY AND CONDITION AFTER SHIPMENT WILL BE INSPECTED AFTER DELIVERY TO THE CONSTRUCTION SITE, WITH THIS AND ANY PREVIOUS INSPECTIONS CONSTITUTING ONLY PARTIAL ACCEPTANCE.

REPAIRS:

REPAIRS OF DAMAGE CAUSED TO THE PANELS DURING FABRICATION, LIFTING AND HANDLING, OR TRANSPORTATION SHALL BE ADDRESSED ON A CASE-BY-CASE BASIS. DAMAGE WITHIN ACCEPTABLE LIMITS CAUSED TO THE TOP OF THE SURFACE (DRIVING SURFACE) OR TO KEYED EDGES OF THE PANELS SHALL BE REPAIRED USING AN APPROVED REPAIR METHOD AT THE FABRICATION PLANT AT THE EXPENSE OF THE CONTRACTOR. REPETITIVE DAMAGE TO PANELS SHALL BE CAUSE FOR STOPPAGE OF FABRICATION OPERATIONS UNTIL CAUSE OF DAMAGE CAN BE REMEDIED.

INSTALLATION:

1. THE FABRICATION AND INSTALLATION OF A NON-GENERIC TOLLWAY APPROVED PRECAST SYSTEM SHALL BE IN ACCORDANCE WITH THE MANUFACTURER'S RECOMMENDATIONS. THE FABRICATION AND INSTALLATION OF GENERIC ILLINOIS TOLLWAY SYSTEM PRECAST APPROACH SLABS SHALL BE IN ACCORDANCE WITH THE GENERAL NOTES ON ILLINOIS TOLLWAY STANDARD DRAWINGS A1, IN ADDITION TO WHAT IS SPECIFIED OR NOTED IN THE PLANS FOR THE SPECIFIC CONTRACT.

2. THE CONTRACTOR SHALL BE RESPONSIBLE TO PERFORM ALL 2 AND 3 DIMENSIONAL SURVEYS OF EXISTING PAVEMENTS AND STRUCTURES AS REQUIRED BY THE APPROVED PRECAST SYSTEM MANUFACTURER OR BY TOLLWAY STANDARDS TO PROPERLY FABRICATE AND INSTALL THE SLABS TO OBTAIN THE FINISHED SURFACE ELEVATIONS AND MINIMUM THICKNESSES AS REQUIRED BY THE SPECIFIC CONTRACT.

3. ALL PRECAST SLABS INSTALLED MUST BE SECURED IN PLACE USING NON-COMPRESSIBLE TAPERED SHIMS AS SPECIFIED BEFORE BEING OPENED TO TRAFFIC AND UNTIL THE SLABS ARE PERMANENTLY CONNECTED AND GROUTED TO ADJACENT PAVEMENT.

4. FOR PRECAST SLABS SUPPORTED AND LEVELED BY LEVELING BOLTS OVER THE PILE CAP AND ABUTMENT, THE SPECIFIED SUPPORT BEDDING GROUT SHALL BE USED AFTER FULL SLAB INSTALLATION TO FILL ALL VOIDS BETWEEN THE PRECAST SLAB OVER UNDERLYING PILE CAP AND ABUTMENT, BEFORE THE SLABS ARE OPENED TO TRAFFIC.

5. ANY TIE BARS REQUIRED IN LONGITUDINAL JOINTS BETWEEN PRECAST SLABS SHALL BE INSTALLED IN ACCORDANCE WITH STANDARDS OF THE APPROVED SYSTEM USED.

6. TOP OF SLAB (T.O.S.) ELEVATIONS ARE TO BE BASED ON THE DESIGNED PROFILE FOR THE BRIDGE, WHICH THE APPROACH SLAB IS DESIGNED FOR. NON-PLANAR PANELS FOR SUPER ELEVATED STRUCTURES MAY OBTAIN T.O.S. ELEVATIONS (PROFILE AND CROSS SLOPE) BY EITHER CASTING THE PANELS IN NON-PLANAR FORMS OR BY DIAMOND GRINDING IN ACCORDANCE WITH THIS NOTE. DIAMOND GRINDING OF THE PRECAST APPROACH SLAB, TO OBTAIN DESIRED ELEVATIONS, SHALL NOT BE ALLOWED IF MINIMUM TOTAL THICKNESS OR CLEAR COVER OVER TOP REINFORCEMENT CAN NOT BE SATISFIED.

7. PERFORM SLAB GROVING AFTER DIAMOND GRINDING IS COMPLETE.

Illinois Tollway

PRECAST APPROACH SLAB W/CIP TRANSITION SLAB

DATE
03-01-2021

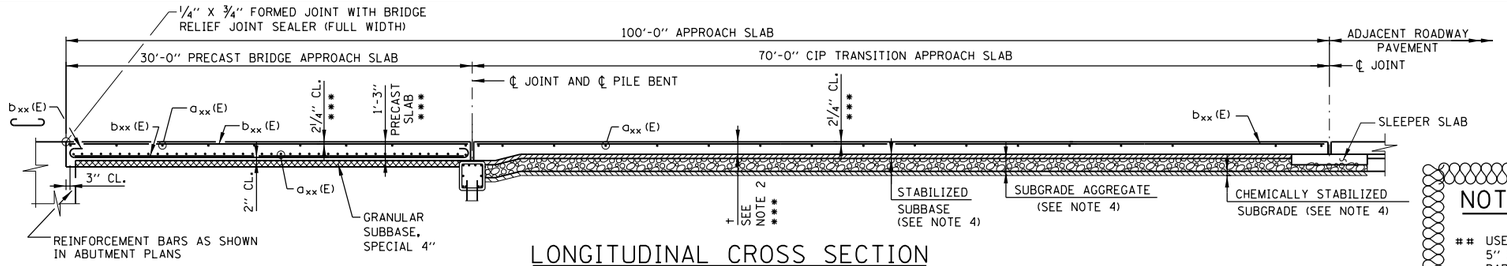

LONGITUDINAL CROSS SECTION

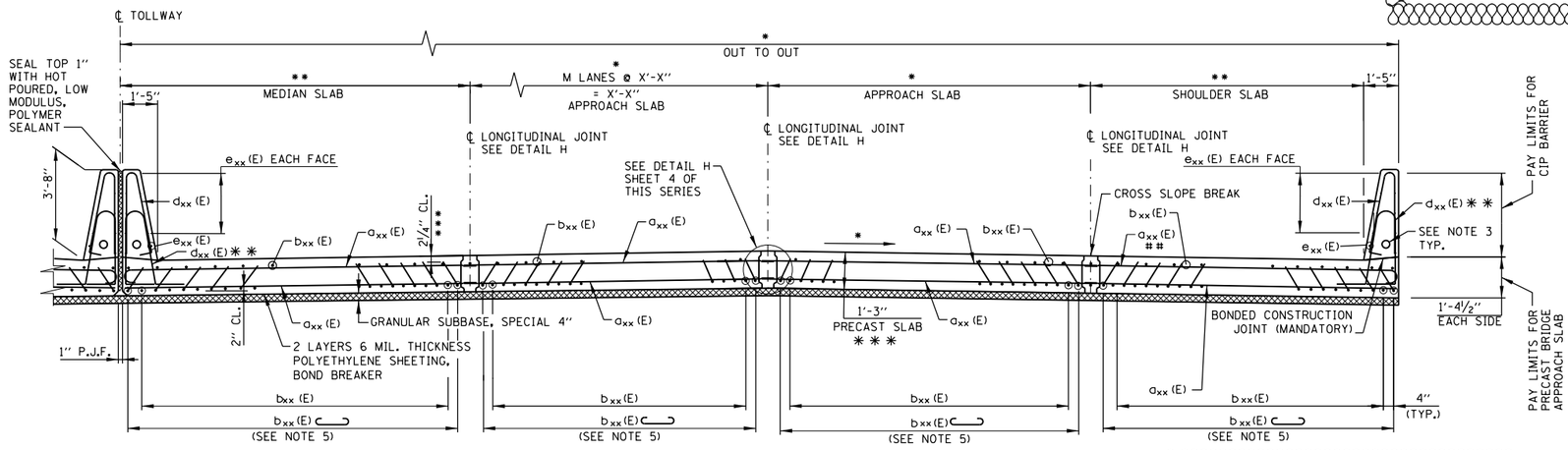

SECTION A-A
PRECAST BRIDGE APPROACH SLAB

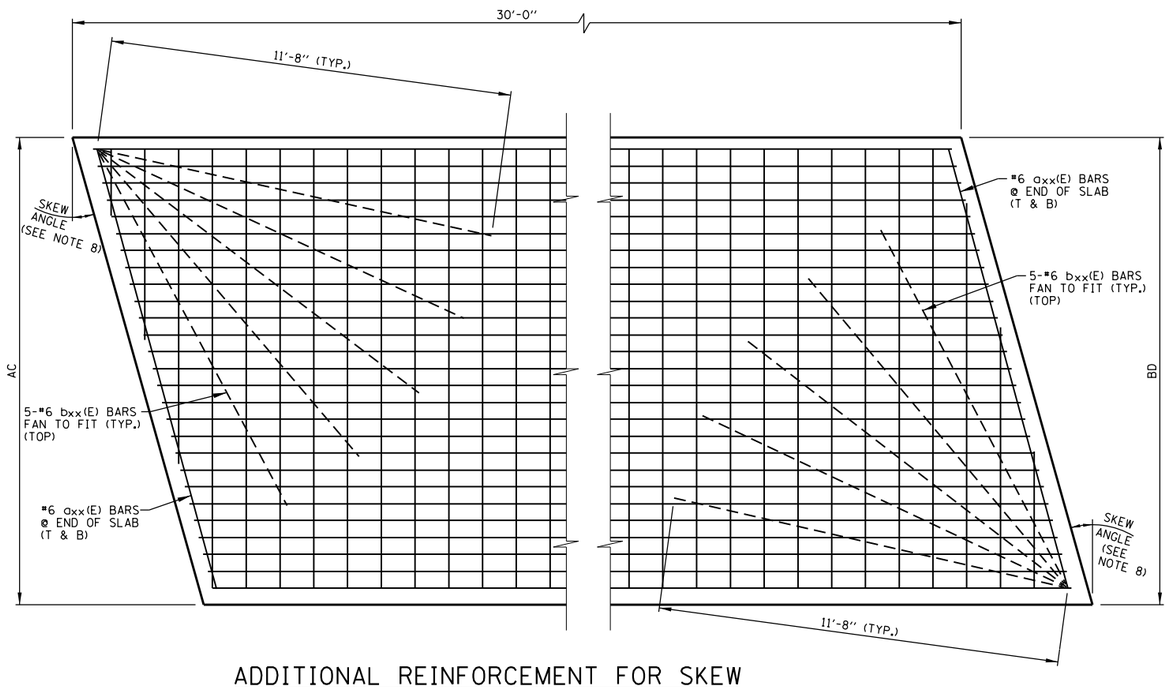

ADDITIONAL REINFORCEMENT FOR SKEW
PRECAST BRIDGE APPROACH SLAB
N.T.S.

NOTE TO DESIGNER

sym USE #7 axx(E) HOOKED BARS AT 5" SPACING FOR TOP TRANSVERSE BARS OVER SHOULDER WHEN THE BARRIER HEIGHT IS 72".

NOTE TO DESIGNER

* DIMENSIONS SHALL CONFORM WITH APPROACH ROADWAY.

** APPROACH SLAB SHOULDER WIDTH SHOULD BE ROADWAY SHOULDER WIDTH +1'-0" FOR GUARDRAIL OR +2'-0" FOR SINGLE FACE BARRIER SO THAT APPROACH ROADWAY FLOW LINE MATCHES BARRIER BASE.

*** INCREASE BY 1/4" FOR SMOOTHNESS GRINDING.

** BAR dxx(E) IS CAST IN PRECAST APPROACH SLAB BRIDGE PARAPET SHALL BE CAST IN PLACE AFTER PRECAST SLABS ARE SET.

NOTES:

1. SEE SHEET 1 OF THIS SERIES FOR GENERAL NOTES. SEE SHEET 2 OF THIS SERIES FOR FABRICATION NOTES.
2. THE DIMENSION † IS THE FINAL THICKNESS OF THE CIP TRANSITION APPROACH SLAB AS DEFINED IN THE ROADWAY PLANS.
3. COORDINATE NEED FOR 2" PVC CONDUIT WITH ELECTRICAL AND ITS PLANS. CONDUIT SHALL BE PLACED TO MISS REINFORCEMENT. DO NOT CUT REINFORCEMENT BARS.
4. THE THICKNESSES OF STABILIZED SUBBASE, SUBGRADE AGGREGATE AND CHEMICALLY SYABILIZED SUBGRADE SHALL MATCH THE ADJACENT ROADWAY PAVEMENT SECTIONS.
5. TILT HOOK OF #9 BARS FOR MINIMUM 3 1/2" CLEARANCE.
6. USE 2'-0" MIN. LAP FOR #4 BARS. USE 2-6" MIN. LAP FOR #5 BARS. USE 3'-0" MIN. LAP FOR # 6 BAR.
7. FOR ALL SLABS OF SKEWED SHAPE, REINFORCEMENT SHALL BE LAID OUT IN A PERPENDICULAR GRID PATTERN, NOT SKEWED, EXCEPT FOR EDGE BARS AS SHOWN.
8. FOR PRECAST SLAB CORNERS WITH SKEW ANGLE GREATER THAN 45 DEGREE, PROVIDE 5 #6 BARS, 11'-8" LONG DIRECTLY UNDER THE TOP LAYER OF BARS IN A FANNED ARRANGEMENT.

NOTE TO DESIGNER

DESIGNER SHALL REPLACE BAR MARK CALLOUTS DESIGNATED axx(E) THROUGH Sxx(E) WITH ACTUAL BAR MARKS. DESIGNER SHALL REPLACE "M" CALL OUT WITH ACTUAL NUMBER IN DIMENSION LINE.

DETAILS PRESENTED IN THESE SHEET SHALL NOT BE USED FOR SKEW GREATER THAT 45°

NOTE TO DESIGNER

BARS dxx(E) SHOWN IN THIS SHEET ARE APPLICABLE FOR 44" BARRIERS ONLY. UPDATE BASED ON BARRIER TYPE.

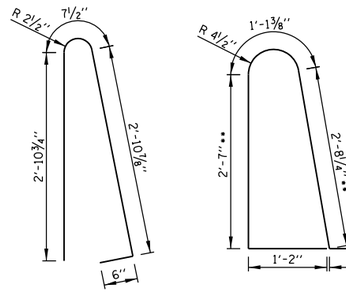

BAR dxx(E)

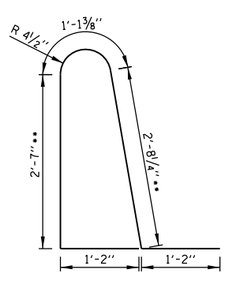

BAR dxx(E)

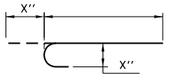

BARS axx (E)

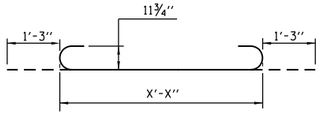

BAR bxx(E)

PRECAST APPROACH SLAB BAR LIST FOR INFO ONLY

BAR	NO.	SIZE	LENGTH	SHAPE
axx(E)				
axx(E)				
bxx(E)				
bxx(E)			11'-8"	
bxx(E)		#9		
dxx(E)		#5	8'-2"	

SHEET 3 OF 7
BASE SHEET M-RDY-410

NOTE TO DESIGNER

THIS BASE SHEET SHOWS TYPICAL NEW CONSTRUCTION BUT IT IS NOT A STANDARD DRAWING. IT REQUIRES COMPLETION BY THE DESIGNER PRIOR TO INSERTION INTO A CONTRACT. MICROSTATION FILES ARE CONTAINED W/IN THE CADD MANUAL RESOURCE CD OR AVAILABLE FROM THE TOLLWAY. THE DESIGNER SHALL ACCEPT THE RESPONSIBILITY OF THE DESIGN OF THIS SHEET UPON ITS COMPLETION & INSERTION INTO A CONTRACT. THIS "NOTE TO DESIGNER" SHALL BE REMOVED BY THE DESIGNER PRIOR TO INSERTION OF THE SHEET INTO THE PLAN SET.

Illinois Tollway

PRECAST APPROACH SLAB W/CIP TRANSITION SLAB

DATE
03-01-2021

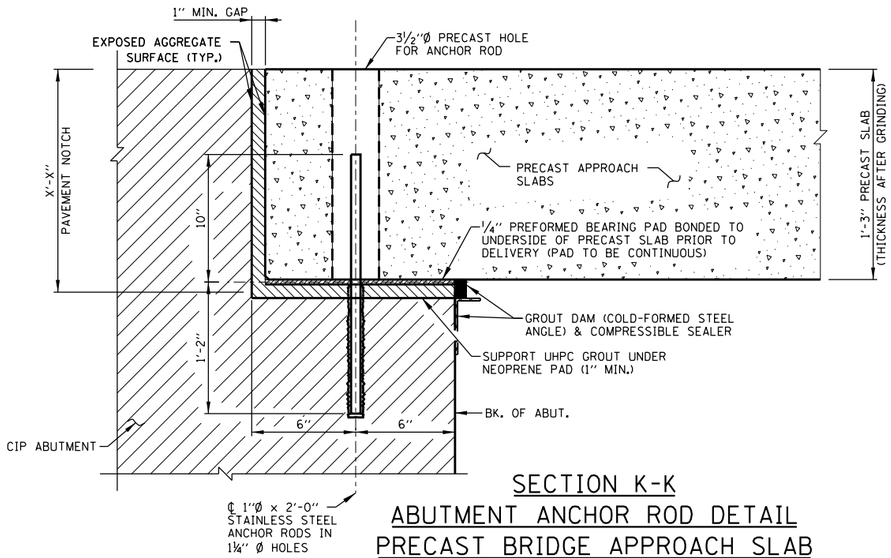

SECTION K-K
ABUTMENT ANCHOR ROD DETAIL
PRECAST BRIDGE APPROACH SLAB

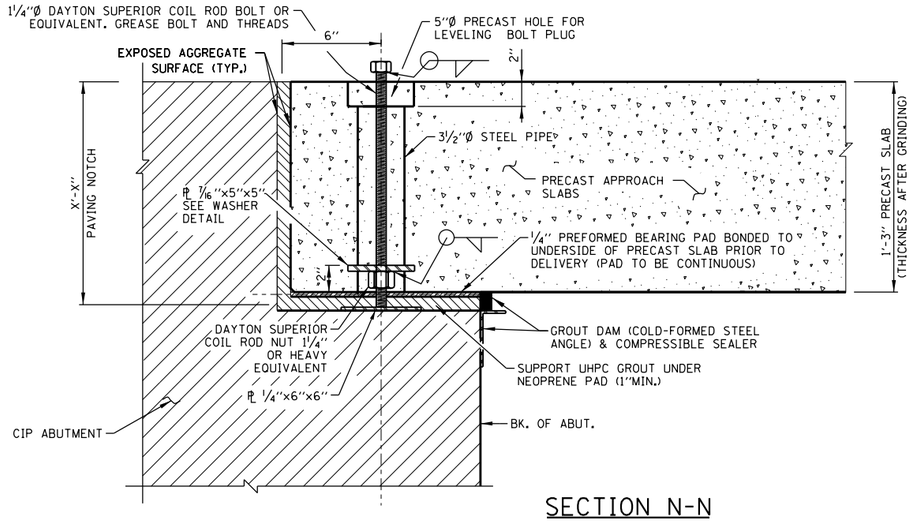

SECTION N-N
ABUTMENT LEVELING BOLT DETAIL
PRECAST BRIDGE APPROACH SLAB

NOTE TO DESIGNER

DESIGNER SHALL REPLACE THE PAYITEM NUMBER AND DESCRIPTION FOR BONDED PREFORMED JOINT SEAL PER DESIGN REQUIREMENT.

BILL OF MATERIAL FOR PRECAST BRIDGE APPROACH SLAB

	PAY ITEM NO.	DESCRIPTION	UNIT	QUANTITY
****	50300260	BRIDGE DECK GROOVING	SQ. FT.	
	50300300	PROTECTIVE COAT	SQ. YD.	
	JS503160	DIANOND GRINDING AND SURFACE SMOOTHNESS FOR BRIDGE SECTIONS	SQ. YD.	
	JT301010	GRANULAR SUBBASE, SPECIAL	CU. YD.	
	JT504100	PRECAST CONCRETE BRIDGE APPROACH SLABS	SQ. FT.	
	JT504101	PRECAST CONCRETE BRIDGE APPROACH SHOULDER SLABS	SQ. FT.	
	JT525130	BONDED PREFORMED JOINT SEAL, 3 IN.	FT.	
****	X5030250	BRIDGE DECK GROOVING (LONGITUDINAL)	SQ. FT.	
	*	UHPC CONCRETE	CU. YD.	

* FOR INFORMATION ONLY

NOTE TO DESIGNER

**** SELECT APPLICABLE PAY ITEM TO MATCH THE BRIDGE.

NOTES FOR ANCHOR RODS:

1. DRILL HOLES THAT ARE ORIENTED AT 90° ± 5° ANGLE TO THE PAVEMENT SURFACE. TYPICAL HOLE DIAMETER SHALL BE 1¼".
2. HOLE CENTERLINES ARE PERPENDICULAR TO THE JOINT (IN PLAN VIEW) AT EACH LOCATION BEING DRILLED.
3. SELECT A DRILL THAT MINIMIZES DAMAGE TO THE CONCRETE SURFACE, SUCH AS A HYDRAULIC POWERED DRILL.
4. DRILL HOLES AT SPACING SHOWN ON PLAN.
5. AIR BLOW THE HOLES TO REMOVE DUST AND DEBRIS AFTER DRILLING.
6. INJECT EPOXY GROUT INTO THE HOLE, LEAVING SOME VOLUME FOR THE BAR TO OCCUPY THE HOLE. (POURING THE ADHESIVE IS ACCEPTABLE FOR SMALL QUANTITIES.)
7. INSERT THE 1-IN. DIA. ROD INTO THE HOLE TO THE DEPTH PER PLAN AND FINISH EPOXY GROUT AND PLACE NON-SHRINK GROUT FROM TOP OF BAR TO FINISH SURFACE.
8. ANCHOR ROD SHALL BE DOWELED INTO THE ABUTMENT BEFORE SLAB INSTALLATION. ANCHOR RODS SHALL EXTEND THROUGH PREFORMED HOLES IN THE PRECAST SLABS. IF HOLES ARE NOT ALIGNED WITH EMBEDDED RODS, NEW HOLES OF 2" MAXIMUM DIAMETER SHALL BE DRILLED BY THE CONTRACTOR INTO THE PRECAST SLABS.
9. SEE SPECIAL PROVISIONS "PRECAST CONCRETE BRIDGE APPROACH SLABS" FOR INSTALLATION OF BRIDGE APPROACH SLAB ANCHOR RODS.

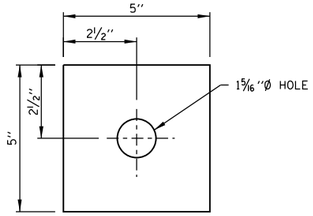

WASHER DETAIL

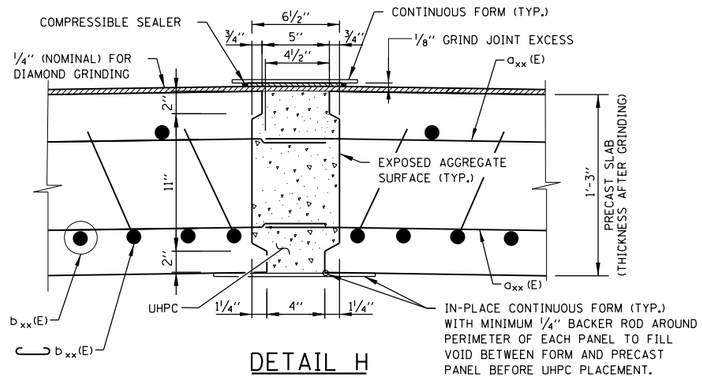

DETAIL H

LONGITUDINAL JOINT DETAIL FOR PRECAST TO PRECAST SLABS

NOTE TO DESIGNER

DETERMINE FINAL HEIGHT OF PAVING NOTCH TO ACCOUNT FOR PROFILE, X-SLOPE, THICKNESS OF NEOPRENE BEARING PAD, GROUT AND PRECAST SLAB.

NOTE TO DESIGNER

THIS BASE SHEET SHOWS TYPICAL NEW CONSTRUCTION BUT IT IS NOT A STANDARD DRAWING. IT REQUIRES COMPLETION BY THE DESIGNER PRIOR TO INSERTION INTO A CONTRACT. MICROSTATION FILES ARE CONTAINED W/IN THE CADD MANUAL RESOURCE CD OR AVAILABLE FROM THE TOLLWAY. THE DESIGNER SHALL ACCEPT THE RESPONSIBILITY OF THE DESIGN OF THIS SHEET UPON ITS COMPLETION & INSERTION INTO A CONTRACT. THIS "NOTE TO DESIGNER" SHALL BE REMOVED PRIOR TO INSERTION OF THE SHEET INTO THE PLAN SET.

NOTE TO DESIGNER

BRIDGE DECK GROOVING LIMITS ARE TRAVEL LANES ONLY.

NOTE TO DESIGNER

DIAMOND GRINDING, IF APPLICABLE, LIMITS ARE THE FULL WIDTH LESS 2FT AT EACH PARAPET.

Illinois Tollway

PRECAST APPROACH SLAB W/CIP TRANSITION SLAB

DATE
03-01-2021

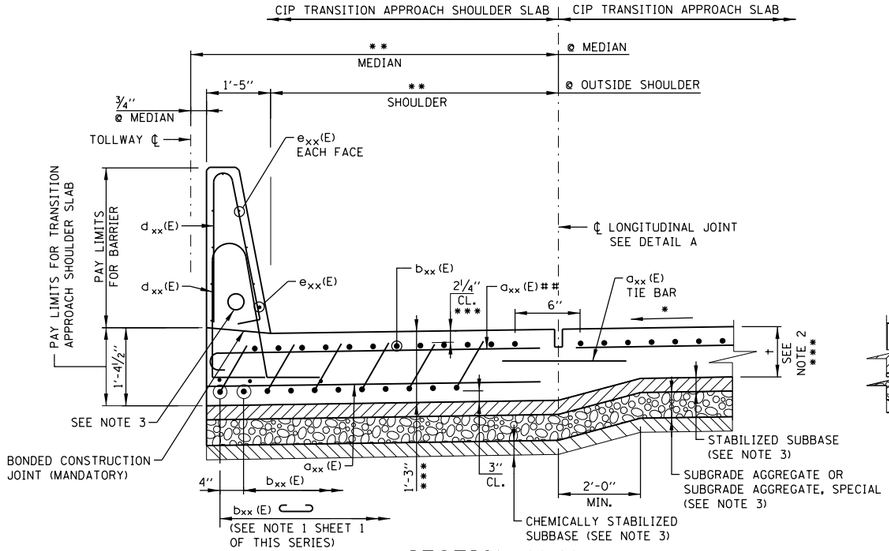

SECTION M-M
CIP TRANSITION APPROACH SHOULDER SLAB

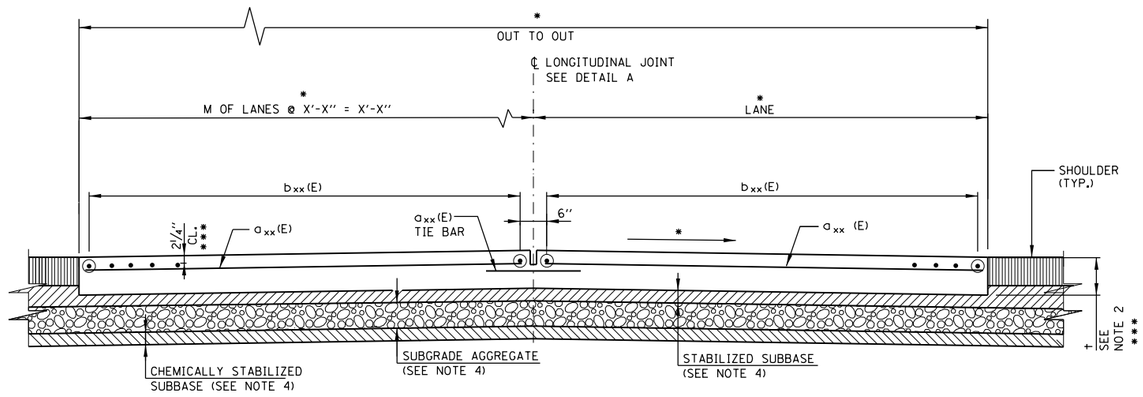

SECTION B-B
CIP TRANSITION APPROACH SLAB

NOTE TO DESIGNER

USE #7 axx(E) HOOKED BARS AT 5" SPACING FOR TOP TRANSVERSE BARS OVER SHOULDER WHEN THE BARRIER HEIGHT IS 72".

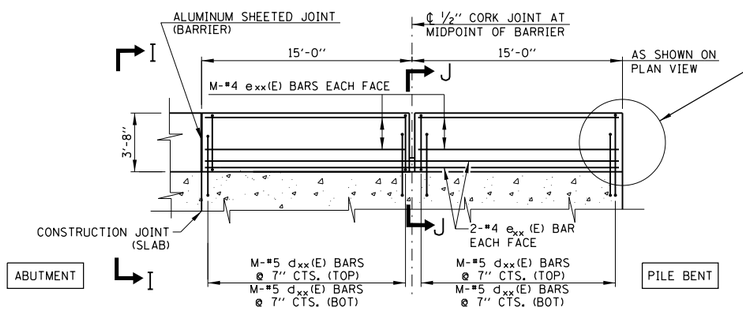

CIP BARRIER ELEVATION

NOTE TO DESIGNER

IF GUARDRAIL PROVIDED, SEE SHEET 7 OF THIS SERIES FOR TYP. BARRIER TRANSITION DETAIL

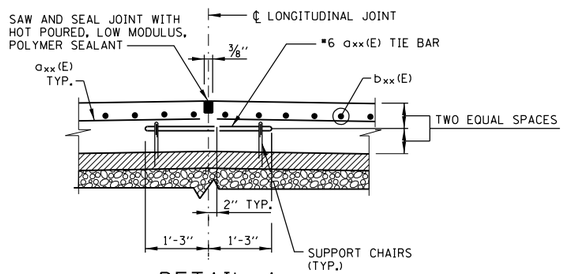

DETAIL A
TYPICAL LONGITUDINAL JOINT
(IN CIP TRANSITION SLAB ONLY)

NOTE TO DESIGNER

* DIMENSIONS SHALL CONFORM WITH APPROACH ROADWAY.

** APPROACH SLAB SHOULDER WIDTH SHOULD BE ROADWAY SHOULDER WIDTH +1'-0" FOR GUARDRAIL OR +2'-0" FOR SINGLE FACE BARRIER SO THAT APPROACH ROADWAY FLOW LINE MATCHES BARRIER BASE.

*** INCREASE BY ¼" FOR SMOOTHNESS GRINDING.

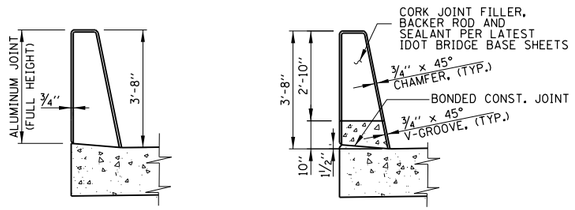

SECTION I-I

SECTION J-J

PARAPET JOINT DETAILS

NOTES:

1. SEE SHEET 1 OF THIS SERIES FOR GENERAL NOTES.
2. THE DIMENSION + IS THE THICKNESS OF THE TRANSITION APPROACH SLAB AS DEFINED IN THE ROADWAY PLANS.
3. COORDINATE NEED FOR 2" PVC CONDUIT WITH ELECTRICAL AND ITS PLANS. CONDUIT SHALL BE PLACED TO MISS REINFORCEMENT. DO NOT CUT REINFORCEMENT BARS.
4. THE THICKNESS OF THE STABILIZED SUBBASE, SUBGRADE AGGREGATE AND CHEMICALLY STABILIZED SUBGRADE SHALL MATCH THE ADJACENT ROADWAY PAVEMENT SECTIONS.
5. IF THE CONTRACTOR ELECTS TO SLIPFORM THE PARAPET THEN THE PARAPET CROSS-SECTIONAL AREA, PARAPET REINFORCEMENT BARS CLEARANCES AND THE APPROACH SLAB REINFORCEMENT BARS SHALL BE REVISED ACCORDINGLY TO ACCOUNT FOR THE ADDITIONAL SLAB WIDTH TO ALLOW SLIPFORM.
6. THE ⅛" ALUMINUM SHEET SHALL BE ASTM B 209 ALLOY 3003-H14 AND COATED TO MINIMIZE REACTION WITH WET CONCRETE.

NOTE TO DESIGNER

THIS BASE SHEET SHOWS TYPICAL NEW CONSTRUCTION BUT IT IS NOT A STANDARD DRAWING. IT REQUIRES COMPLETION BY THE DESIGNER PRIOR TO INSERTION INTO A CONTRACT. MICROSTATION FILES ARE CONTAINED W/IN THE CADD MANUAL RESOURCE CD OR AVAILABLE FROM THE TOLLWAY. THE DESIGNER SHALL ACCEPT THE RESPONSIBILITY OF THE DESIGN OF THIS SHEET UPON ITS COMPLETION & INSERTION INTO A CONTRACT. THIS "NOTE TO DESIGNER" SHALL BE REMOVED BY THE DESIGNER PRIOR TO INSERTION OF THE SHEET INTO THE PLAN SET.

Illinois Tollway

PRECAST APPROACH SLAB W/CIP TRANSITION SLAB

DATE
03-01-2021

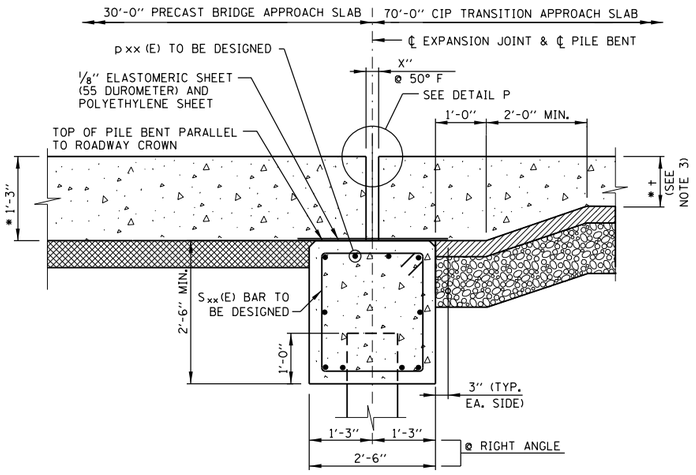

SECTION D-D

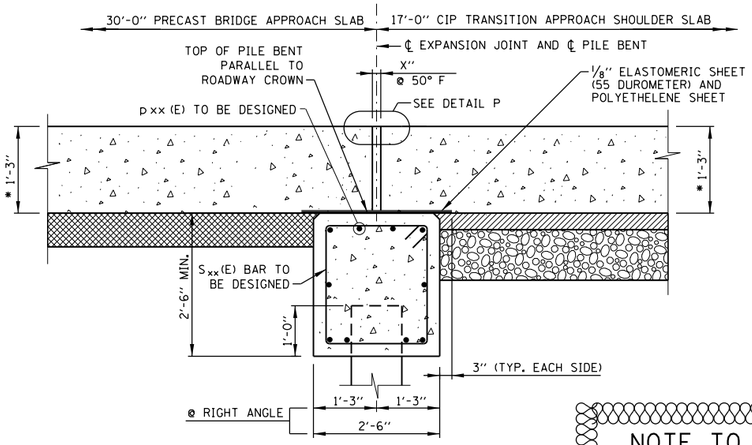

SECTION E-E

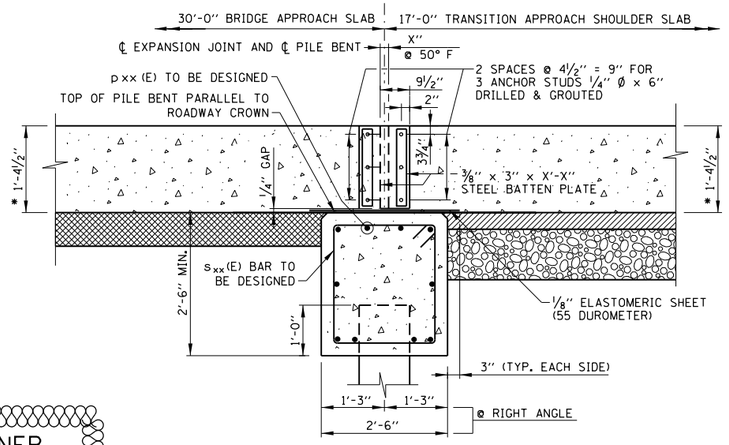

VIEW E'-E'
END ELEVATION OF EXPANSION JOINT

NOTE TO DESIGNER

DESIGNER SHALL REPLACE BAR MARK CALLOUTS DESIGNATED a_{xx}(E) THROUGH S_{xx}(E) WITH ACTUAL BAR MARKS. DESIGNER SHALL REPLACE "M" CALL OUT WITH ACTUAL NUMBER IN DIMENSION LINE.

NOTE TO DESIGNER

THIS BASE SHEET SHOWS TYPICAL NEW CONSTRUCTION BUT IT IS NOT A STANDARD DRAWING. IT REQUIRES COMPLETION BY THE DESIGNER PRIOR TO INSERTION INTO A CONTRACT. MICROSTATION FILES ARE CONTAINED W/IN THE CADD MANUAL RESOURCE CD OR AVAILABLE FROM THE TOLLWAY. THE DESIGNER SHALL ACCEPT THE RESPONSIBILITY OF THE DESIGN OF THIS SHEET UPON ITS COMPLETION & INSERTION INTO A CONTRACT. THIS "NOTE TO DESIGNER" SHALL BE REMOVED BY THE DESIGNER PRIOR TO INSERTION OF THE SHEET INTO THE PLAN SET.

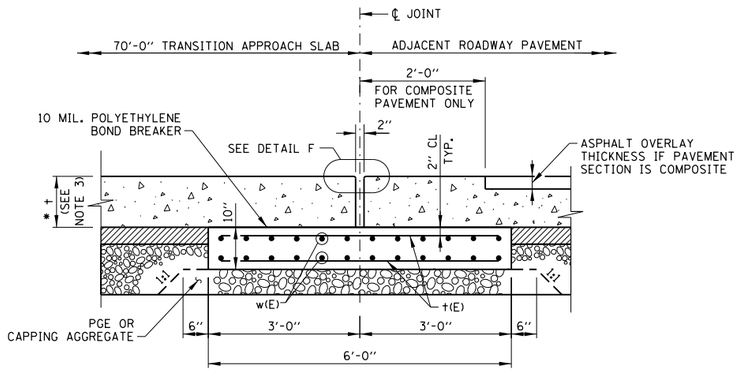

SECTION F-F

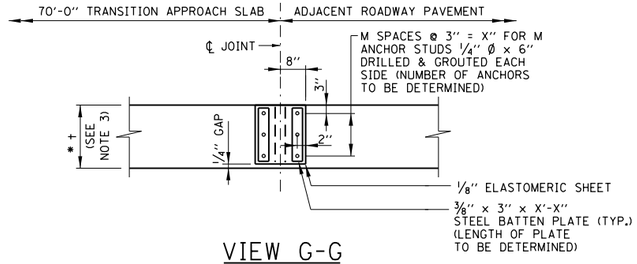

VIEW G-G
END ELEVATION OF JOINT

NOTE TO DESIGNER

DESIGNER TO PROVIDE JOINT (3" MIN.) SIZE AND OPENING CONSISTENT WITH BRIDGE AND APPROACH CONTRIBUTING LENGTH. DESIGNER TO DETERMINE NUMBER OF ANCHORS AND SIZE OF BATTEN PLATE.

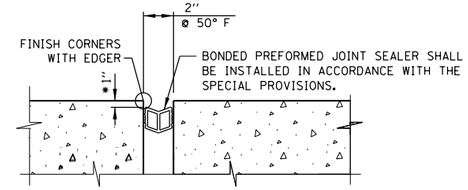

DETAIL F
TRANSITION JOINT

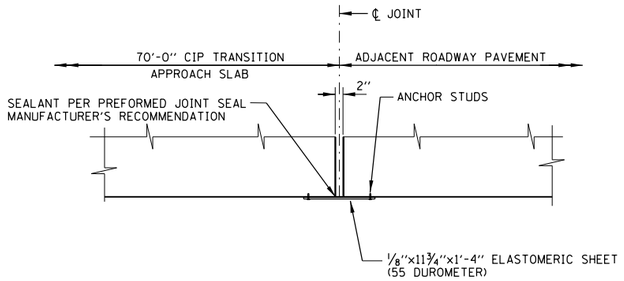

DETAIL C
END PLAN OF JOINT

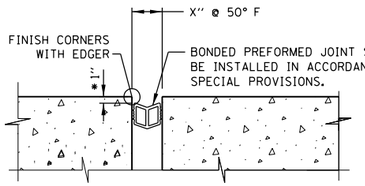

DETAIL P
APPROACH & TRANSITION JOINT

NOTE TO DESIGNER

* INCREASE BY 1/4" FOR SMOOTHNESS GRINDING.

LEGEND

- CONCRETE
- STABILIZED SUBBASE
- SUBGRADE AGGREGATE OR SUBGRADE AGGREGATE, SPECIAL
- GRANULAR SUBBASE

NOTES:

1. IN VIEW E'-E' AND VIEW G-G, ANCHOR STUDS SHALL BE INSTALLED IN ACCORDANCE WITH ARTICLE 1006.09 OF THE IDOT STANDARD SPECIFICATIONS. STEEL PLATES, ANCHOR STUDS, NUTS AND WASHERS SHALL BE GALVANIZED.
2. THE THICKNESSES OF STABILIZED SUBBASE AND SUBGRADE AGGREGATE SHALL BE THE SAME AS FOR THE ADJACENT PAVEMENT SECTIONS.
3. THE DIMENSION † IS THE THICKNESS OF THE TRANSITION APPROACH SLAB AS DEFINED IN THE ROADWAY PLANS.
4. FOR PILE BENT DETAILS AND QUANTITIES SEE SHEET XX.
5. FOR GENERAL NOTES SEE SHEET 1 OF THIS SERIES.

Illinois Tollway

PRECAST APPROACH SLAB W/CIP TRANSITION SLAB

DATE
03-01-2021

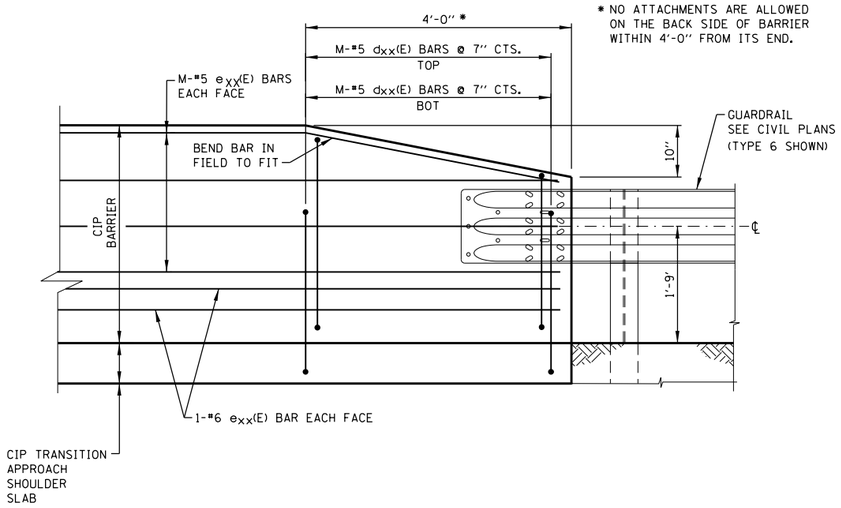

TYPICAL CIP BARRIER TRANSITION DETAIL

(CURB AND GUTTER NOT SHOWN FOR CLARITY)

NOTE TO DESIGNER

USE TYPICAL BARRIER TRANSITION DETAIL AS REQUIRED

NOTE TO DESIGNER

*** ADD PAY ITEM FOR OTHER JOINT SIZES AS APPLICABLE

**** SELECT APPLICABLE PAY ITEM TO MATCH THE ADJACENT BRIDGE.

NOTE TO DESIGNER

* DIMENSIONS SHALL CONFORM WITH APPROACH ROADWAY.

** APPROACH SLAB SHOULDER WIDTH SHOULD BE ROADWAY SHOULDER WIDTH + 1'-0" FOR GUARDRAIL OR 2'-0" FOR SINGLE FACE BARRIER SO THAT APPROACH ROADWAY FLOW LINE MATCHES BARRIER BASE.

NOTE TO DESIGNER

DESIGNER SHALL REPLACE BAR MARK CALLOUTS DESIGNATED $a_{xx}(E)$ THROUGH $s_{xx}(E)$ WITH ACTUAL BAR MARKS. DESIGNER SHALL REPLACE "M" CALL OUT WITH ACTUAL NUMBER IN DIMENSION LINE.

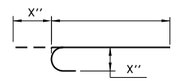

BARS a_{xx} (E)

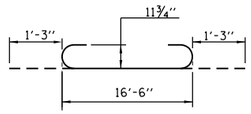

BAR $b_{xx}(E)$

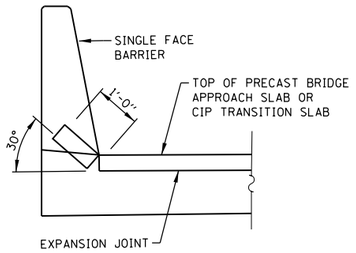

SECTION H-H

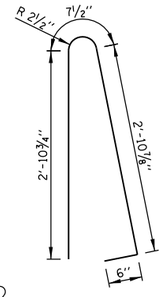

BAR $d_{xx}(E)$

NOTE TO DESIGNER

BARS $d_{xx}(E)$ SHOWN IN THIS SHEET ARE APPLICABLE FOR 44" BARRIERS ONLY. UPDATE BASED ON BARRIER TYPE.

NOTE TO DESIGNER

THIS BASE SHEET SHOWS TYPICAL NEW CONSTRUCTION BUT IT IS NOT A STANDARD DRAWING. IT REQUIRES COMPLETION BY THE DESIGNER PRIOR TO INSERTION INTO A CONTRACT. MICROSTATION FILES ARE CONTAINED W/IN THE CADD MANUAL RESOURCE CD OR AVAILABLE FROM THE TOLLWAY. THE DESIGNER SHALL ACCEPT THE RESPONSIBILITY OF THE DESIGN OF THIS SHEET UPON ITS COMPLETION & INSERTION INTO A CONTRACT. THIS "NOTE TO DESIGNER" SHALL BE REMOVED BY THE DESIGNER PRIOR TO INSERTION OF THE SHEET INTO THE PLAN SET.

BILL OF MATERIAL FOR CIP TRANSITION APPROACH SHOULDER AND CIP TRANSITION APRROACH SLAB

BAR	NO.	SIZE	LENGTH	SHAPE
$a_{xx}(E)$				
$a_{xx}(E)$				
$b_{xx}(E)$		#9	19'-0"	
$d_{xx}(E)$		#5	8'-2"	
†(E)		#4	5'-8"	
w(E)		#5		

	PAY ITEM NO.	DESCRIPTION	UNIT	QUANTITY
****	50300260	BRIDGE DECK GROOVING	SQ. FT.	
	50300300	PROTECTIVE COAT	SQ. YD.	
	JI420041	TRANSITION APPROACH SLAB	SQ. YD.	
	JI420046	TRANSITION APPROACH SHOULDER SLAB	SQ. YD.	
	JS503160	DIAMOND GRINDING AND SURFACE SMOOTHNESS FOR BRIDGE SECTIONS	FT.	
	JT421510	SLEEPER SLAB	SQ. YD.	
***	JT525125	BONDED PREFORMED JOINT SEAL, 2 IN.	FT.	
****	X5030250	BRIDGE DECK GROOVING (LONGITUDINAL)	SQ. FT.	
*		REINFORCEMENT BARS, EPOXY COATED	LBS.	

* FOR INFORMATION ONLY

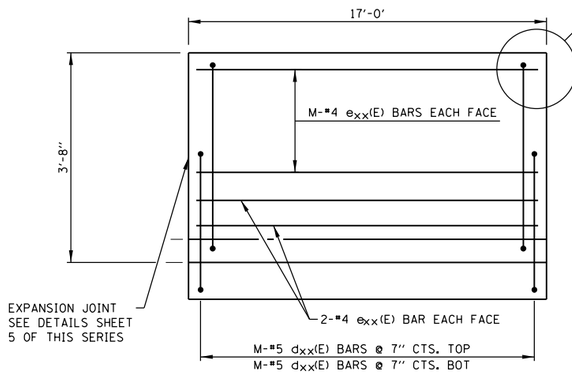

NOTE TO DESIGNER

IF GUARDRAIL PROVIDED, SEE TYP. BARRIER TRANSITION DETAIL.

CIP TRANSITION APPROACH SHOULDER SLAB BARRIER ELEVATION

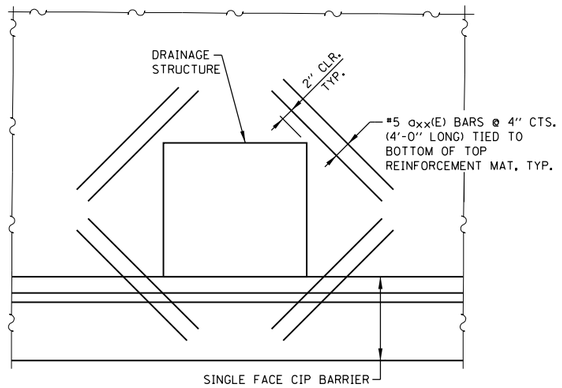

ADDITIONAL REINFORCEMENT AT DRAINAGE STRUCTURES IN CIP TRANSITION APPROACH SHOULDER

CUT TRANSVERSE $a_{xx}(E)$ BARS AND LONGITUDINAL $b_{xx}(E)$ BARS IN SLAB TO CLEAR DRAINAGE STRUCTURE. RESPACE $d_{xx}(E)$ BARS TO MISS DRAINAGE STRUCTURE.

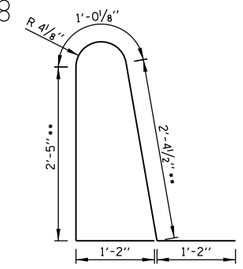

BAR $d_{xx}(E)$

BILL OF MATERIAL FOR CIP BARRIERS

BAR	NO.	SIZE	LENGTH	SHAPE
d(E)		#5	7'-0"	
$e_{xx}(E)$				

PAY ITEM NO.	DESCRIPTION	UNIT	QUANTITY
50300255	CONCRETE SUPERSTRUCTURE	CU. YD.	
50800205	REINFORCEMENT BARS, EPOXY COATED	LBS.	
50300300	PROTECTIVE COAT	SQ. YD.	

NOTE TO DESIGNER

BRIDGE DECK GROOVING LIMITS ARE TRAVEL LANES ONLY.

NOTE TO DESIGNER

QUANTITIES FOR DIAMOND GRINDING, IF APPLICABLE, INCLUDE TRANSITION AND TRANSITION APPROACH SHOULDER. LIMITS ARE THE FULL WIDTH LESS 2FT AT EACH PARAPET.

NOTES:

1. THE AREA OF EACH TRANSITION APPROACH SLAB AND TRANSITION APPROACH SHOULDER SLAB WILL BE MEASURED IN PLACE AND COMPUTED IN SQUARE YARDS. SEE SPECIAL PROVISIONS FOR OTHER WORK THAT IS INCLUDED IN THE COST OF THIS ITEM.
2. THE DIMENSION † IS THE THICKNESS OF THE TRANSITION APPROACH SLAB AS DEFINED IN THE ROADWAY PLANS.
3. FOR GENERAL NOTES SEE SHEET 1 OF THIS SERIES.
4. COORDINATE NEED FOR 2" PVC CONDUIT WITH ELECTRICAL AND ITS PLANS. CONDUIT SHALL BE PLACED TO MISS REINFORCEMENT. DO NOT CUT REINFORCEMENT BARS.

Illinois Tollway

PRECAST APPROACH SLAB W/CIP TRANSITION SLAB

DATE
03-01-2021

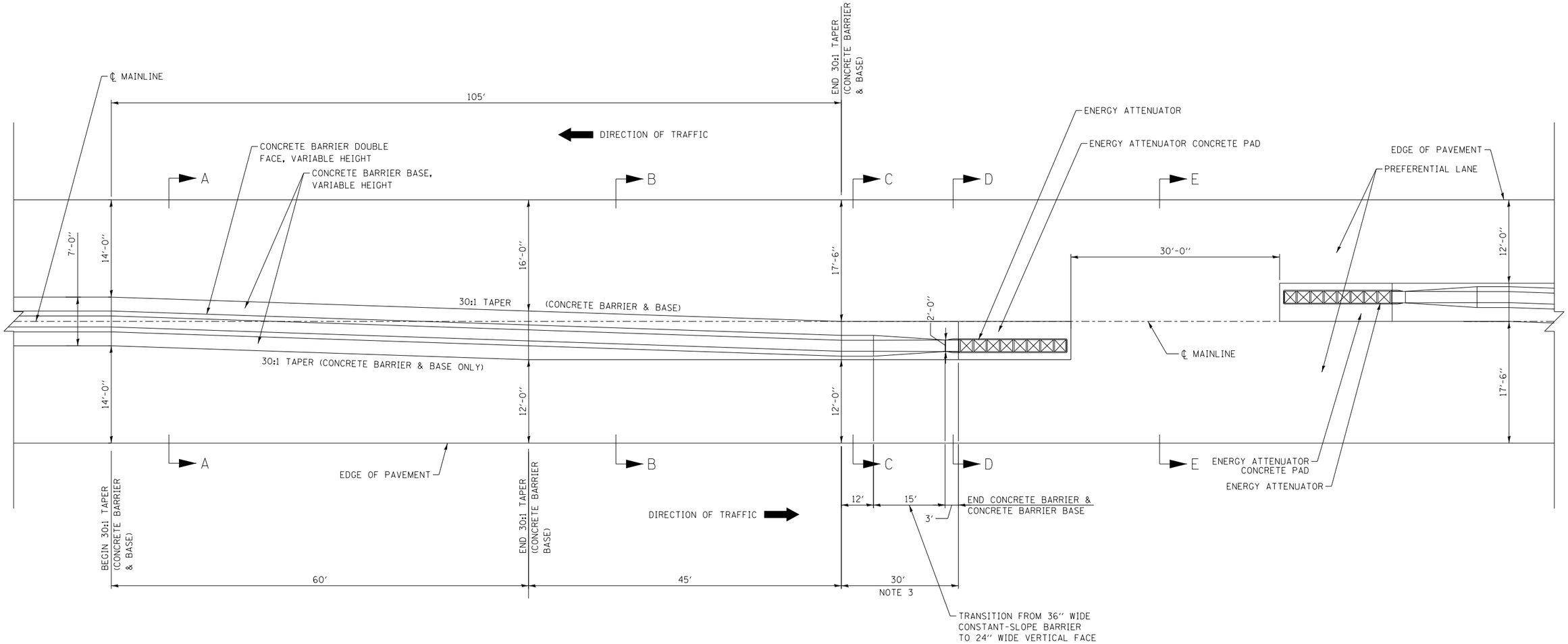

NOTES:

1. SEE SHEET 2 OF THIS SERIES FOR SECTIONS A-A THROUGH E-E.
2. THE TAPER SHOWN FOR THE CONCRETE BARRIER AND CONCRETE BARRIER BASE IS DUPLICATED FOR THE OPPOSING TRAFFIC DIRECTION.
3. CONCRETE BARRIER SHALL BE PINNED TO BARRIER BASE BY PAIRS OF 12″ TIE BARS AT 30″ CENTERS IN THE LAST 30′ OF THE CONCRETE BARRIER.

NOTE TO DESIGNER

1. THE IMPACT ATTENUATOR AND CONCRETE PAD LENGTH WILL BE SELECTED BY THE CONTRACTOR. PROVIDE IN DESIGN, A MINIMUM 21′ IMPACT ATTENUATOR AND PAD.

NOTE TO DESIGNER

THIS BASE SHEET SHOWS TYPICAL NEW CONSTRUCTION BUT IT IS NOT A STANDARD DRAWING. IT REQUIRES COMPLETION BY THE DESIGNER PRIOR TO INSERTION INTO A CONTRACT. MICROSTATION FILES AND THE "CADD STANDARDS MANUAL" ARE AVAILABLE ON THE ILLINOIS TOLLWAY WEBSITE. THE DESIGNER SHALL ACCEPT THE RESPONSIBILITY OF THE DESIGN OF THIS SHEET UPON ITS COMPLETION AND INSERTION INTO A CONTRACT. ALL "NOTE TO DESIGNER" BOXES SHALL BE REMOVED PRIOR TO INSERTION OF THE SHEET INTO THE PLAN SET.

Illinois Tollway

EMERGENCY TURNAROUND MEDIAN WIDTH ≥ 35FT

DATE
3-01-2020

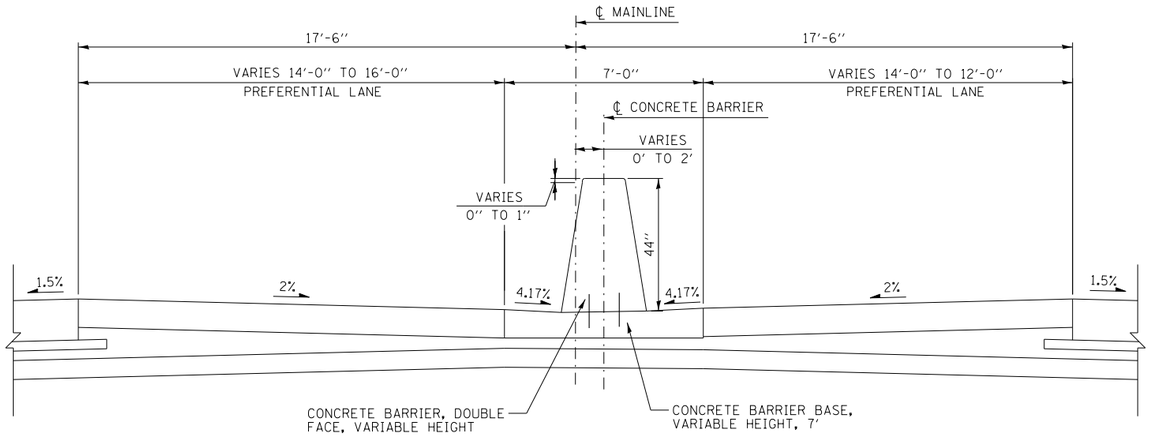

SECTION A-A

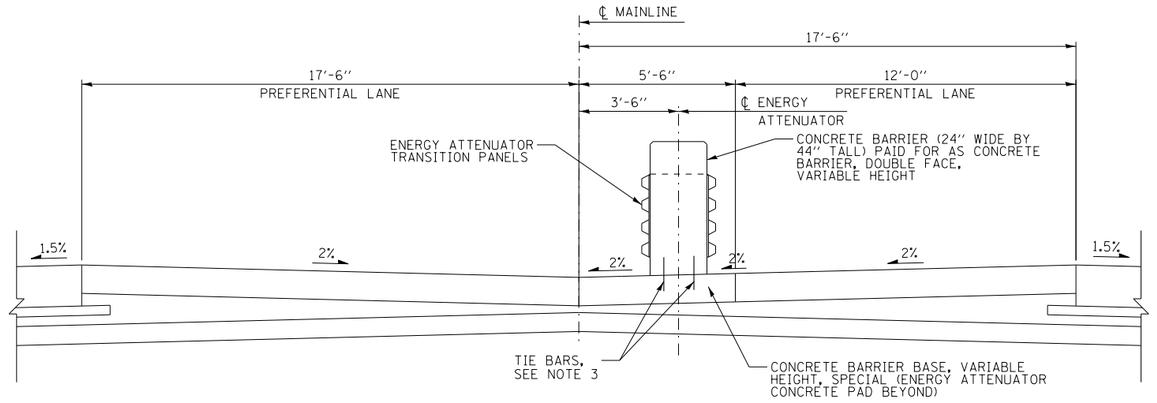

SECTION D-D

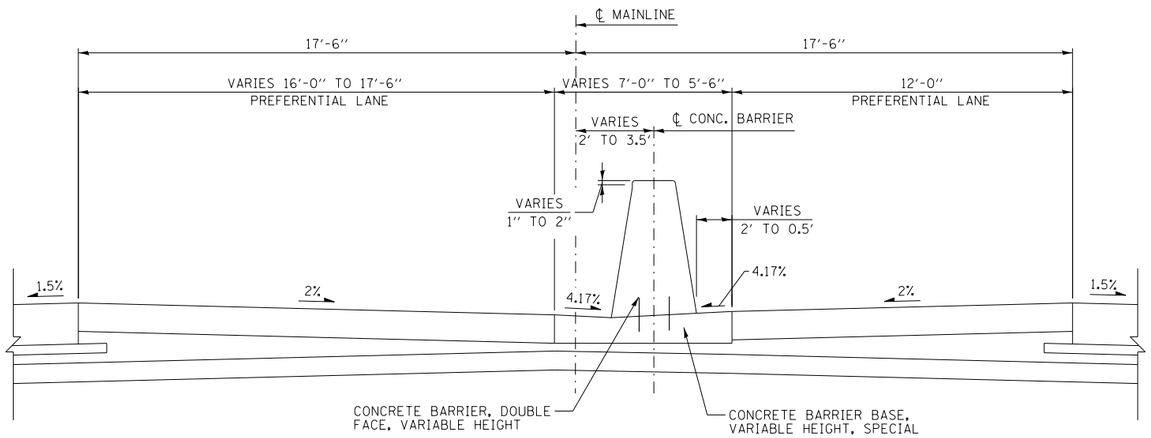

SECTION B-B

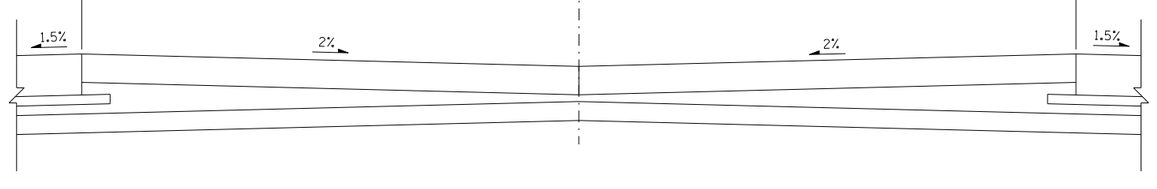

SECTION E-E

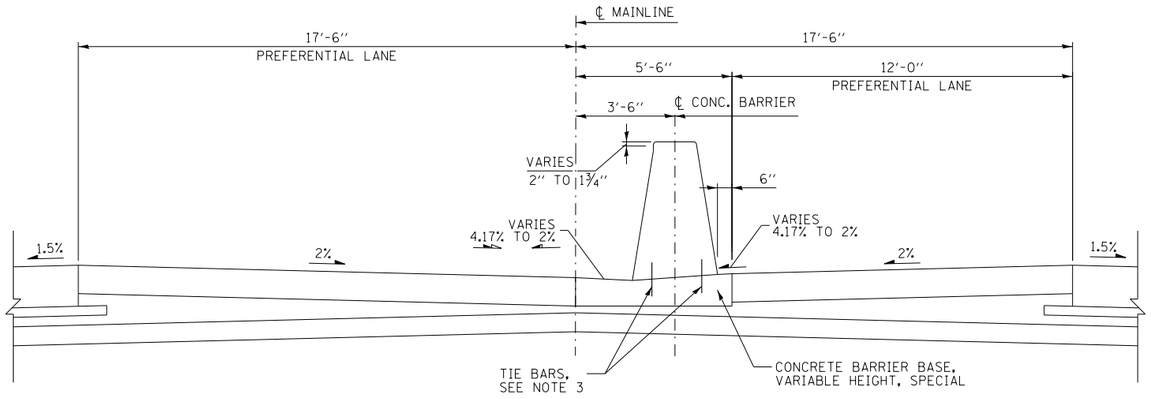

SECTION C-C

NOTE TO DESIGNER

THIS BASE SHEET SHOWS TYPICAL NEW CONSTRUCTION BUT IT IS NOT A STANDARD DRAWING. IT REQUIRES COMPLETION BY THE DESIGNER PRIOR TO INSERTION INTO A CONTRACT. MICROSTATION FILES AND THE "CADD STANDARDS MANUAL" ARE AVAILABLE ON THE ILLINOIS TOLLWAY WEBSITE. THE DESIGNER SHALL ACCEPT THE RESPONSIBILITY OF THE DESIGN OF THIS SHEET UPON ITS COMPLETION AND INSERTION INTO A CONTRACT. ALL "NOTE TO DESIGNER" BOXES SHALL BE REMOVED PRIOR TO INSERTION OF THE SHEET INTO THE PLAN SET.

Illinois Tollway

EMERGENCY TURNAROUND
MEDIAN WIDTH ≥ 35FT

DATE
3-01-2020

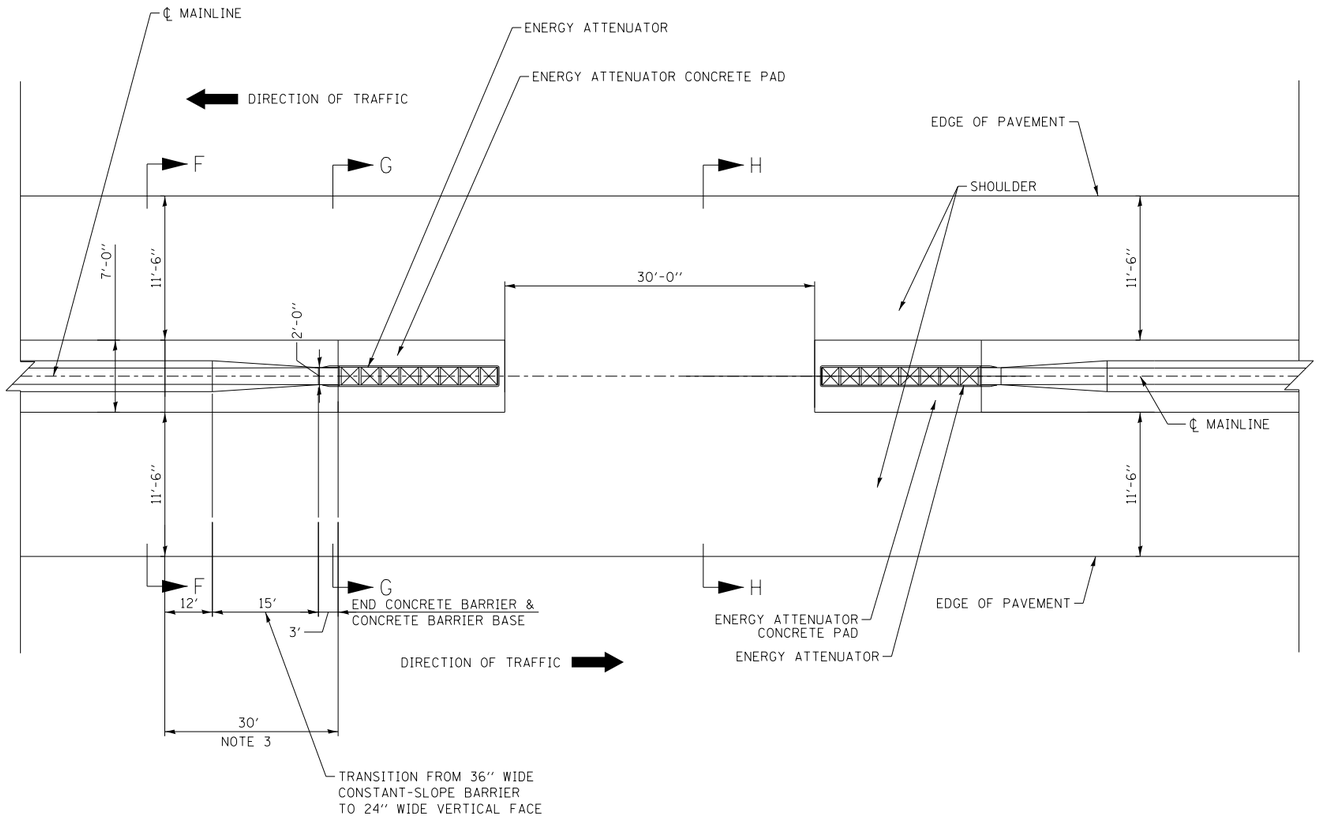

NOTES:

1. SEE SHEET 4 OF THIS SERIES FOR SECTIONS F-F THROUGH H-H.
2. THE TAPER SHOWN FOR THE CONCRETE BARRIER AND CONCRETE BARRIER BASE IS DUPLICATED FOR THE OPPOSING TRAFFIC DIRECTION.
3. CONCRETE BARRIER SHALL BE PINNED TO BARRIER BASE BY PAIRS OF 12'' TIE BARS AT 30'' CENTERS IN THE LAST 30' OF THE CONCRETE BARRIER.

NOTE TO DESIGNER

1. THE IMPACT ATTENUATOR AND CONCRETE PAD LENGTH WILL BE SELECTED BY THE CONTRACTOR. PROVIDE IN DESIGN, A MINIMUM 21' IMPACT ATTENUATOR AND PAD.

NOTE TO DESIGNER

THIS BASE SHEET SHOWS TYPICAL NEW CONSTRUCTION BUT IT IS NOT A STANDARD DRAWING. IT REQUIRES COMPLETION BY THE DESIGNER PRIOR TO INSERTION INTO A CONTRACT. MICROSTATION FILES AND THE ''CADD STANDARDS MANUAL'' ARE AVAILABLE ON THE ILLINOIS TOLLWAY WEBSITE. THE DESIGNER SHALL ACCEPT THE RESPONSIBILITY OF THE DESIGN OF THIS SHEET UPON ITS COMPLETION AND INSERTION INTO A CONTRACT. ALL ''NOTE TO DESIGNER'' BOXES SHALL BE REMOVED PRIOR TO INSERTION OF THE SHEET INTO THE PLAN SET.

Illinois Tollway

EMERGENCY TURNAROUND
MEDIAN WIDTH < 35FT

DATE
3-01-2020

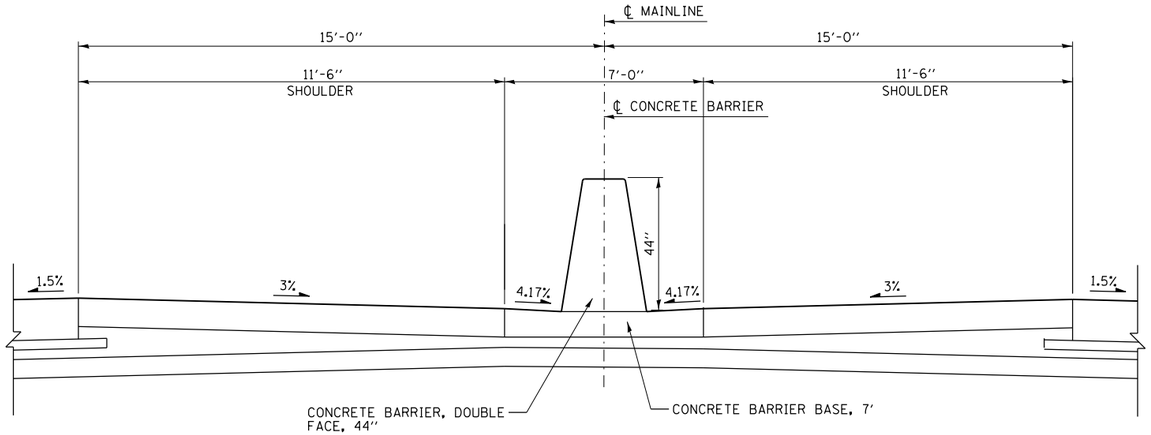

SECTION F-F

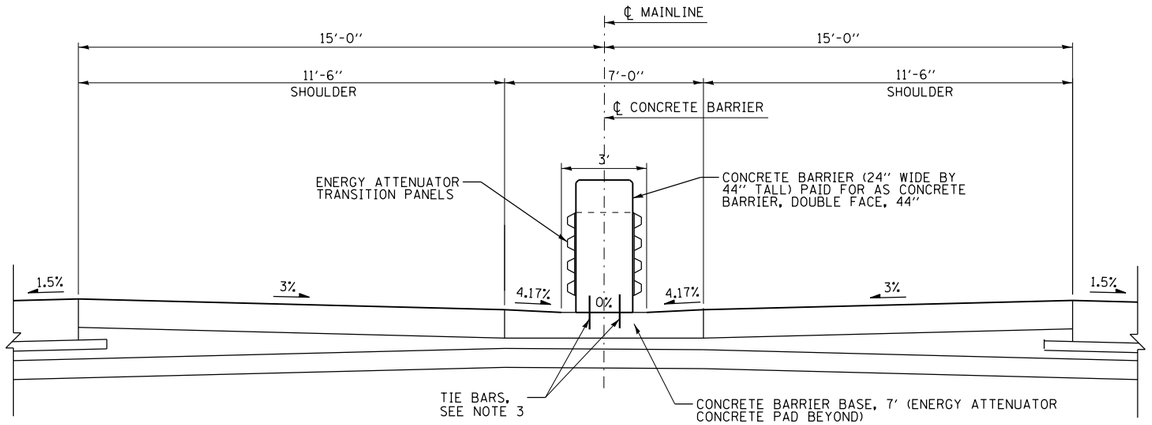

SECTION G-G

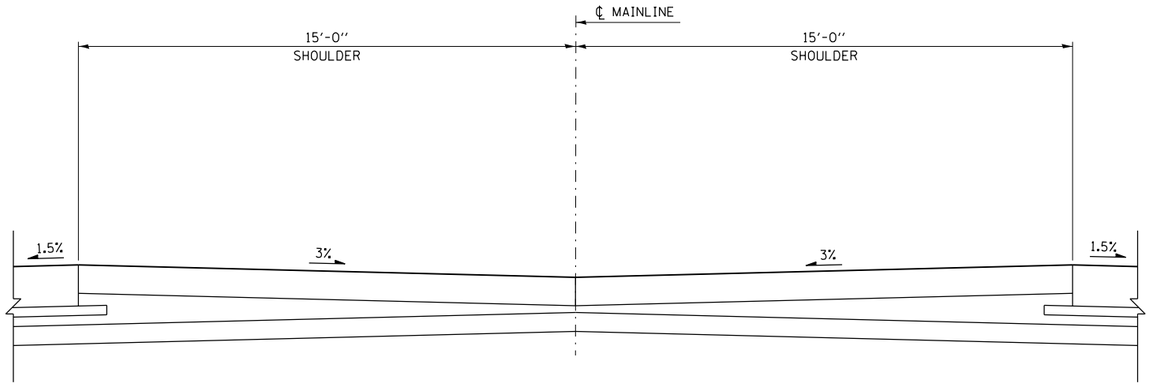

SECTION H-H

NOTE TO DESIGNER

THIS BASE SHEET SHOWS TYPICAL NEW CONSTRUCTION BUT IT IS NOT A STANDARD DRAWING. IT REQUIRES COMPLETION BY THE DESIGNER PRIOR TO INSERTION INTO A CONTRACT. MICROSTATION FILES AND THE "CADD STANDARDS MANUAL" ARE AVAILABLE ON THE ILLINOIS TOLLWAY WEBSITE. THE DESIGNER SHALL ACCEPT THE RESPONSIBILITY OF THE DESIGN OF THIS SHEET UPON ITS COMPLETION AND INSERTION INTO A CONTRACT. ALL "NOTE TO DESIGNER" BOXES SHALL BE REMOVED PRIOR TO INSERTION OF THE SHEET INTO THE PLAN SET.

Illinois Tollway

EMERGENCY TURNAROUND
MEDIAN WIDTH < 35FT

DATE
3-01-2021

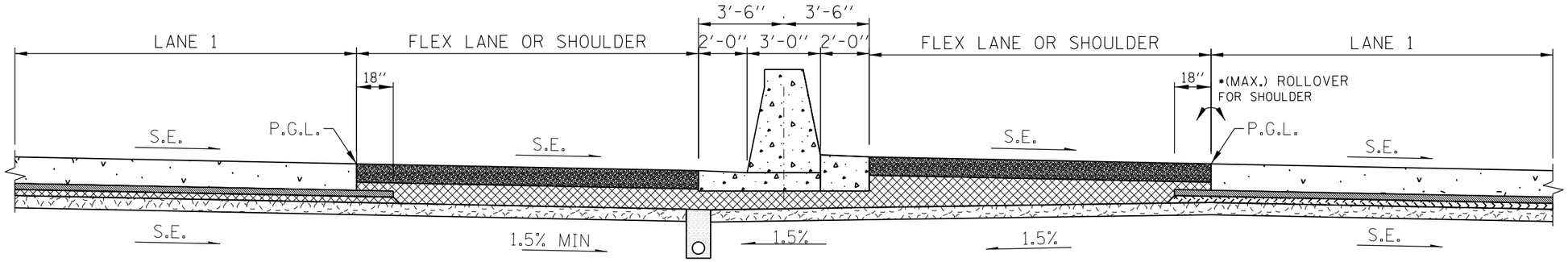

SUBGRADE SLOPES AND PIPE UNDERDRAIN LOCATION
(SUPERELEVATED SECTION, CURVE TO THE RIGHT)

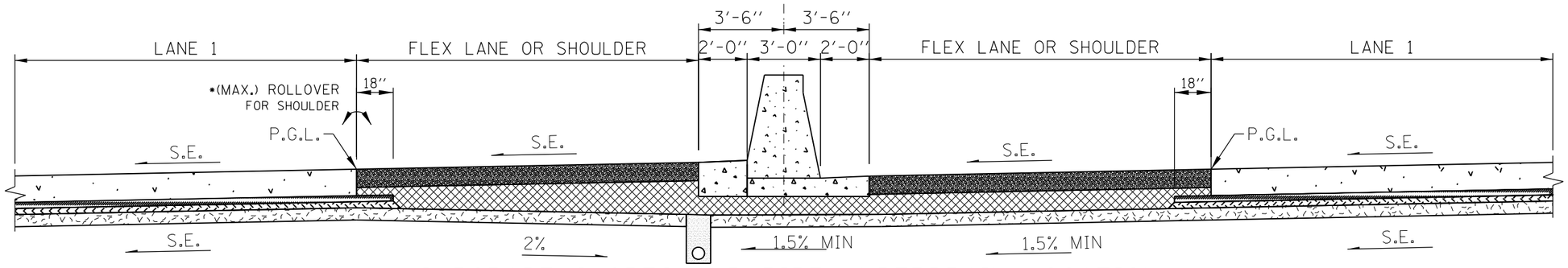

SUBGRADE SLOPES AND PIPE UNDERDRAIN LOCATION
(SUPERELEVATED SECTION, CURVE TO THE LEFT)

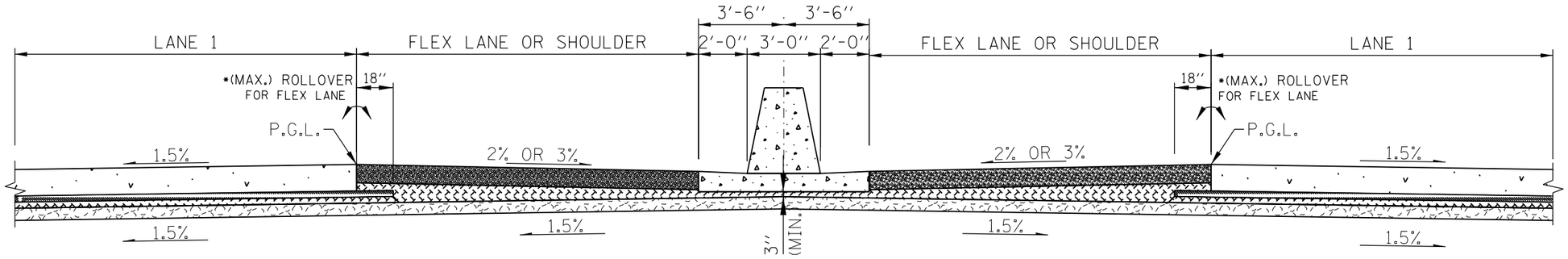

SUBGRADE SLOPES
(NORMAL CROWN SECTION)

NOTE TO DESIGNER

THE UNDERDRAIN CAN BE LOCATED ON EITHER SIDE OF THE MEDIAN. DESIGNER TO DETERMINE WHICH SIDE BASED ON CONSTRUCTION STAGING AND PROJECT SPECIFIC NEEDS.

NOTE TO DESIGNER

IN CASES WHERE 1.5% SUBGRADE CROSS SLOPE AND 3'' MIN SUBGRADE CANNOT BE MET, AN UNDERDRAIN OR ALTERNATIVE DESIGN NEEDS TO BE EVALUATED.

*REFER TO ROADWAY DESIGN CRITERIA SECTION 2.4.9 FOR MAX ROLLOVER VALUES.

NOTE TO DESIGNER

THIS BASE SHEET SHOWS TYPICAL NEW CONSTRUCTION BUT IT IS NOT A STANDARD DRAWING. IT REQUIRES COMPLETION BY THE DESIGNER PRIOR TO INSERTION INTO A CONTRACT. MICROSTATION FILES AND THE ''CADD STANDARDS MANUAL'' ARE AVAILABLE ON THE ILLINOIS TOLLWAY WEBSITE. THE DESIGNER SHALL ACCEPT THE RESPONSIBILITY OF THE DESIGN OF THIS SHEET UPON ITS COMPLETION AND INSERTION INTO A CONTRACT. ALL ''NOTE TO DESIGNER'' BOXES SHALL BE REMOVED BY THE DESIGNER PRIOR TO INSERTION OF THE SHEET INTO THE PLAN SET.

M-RDY-412

Illinois Tollway

ROADWAY SUBGRADE SLOPES
MEDIAN BARRIER

DATE
3-01-2021

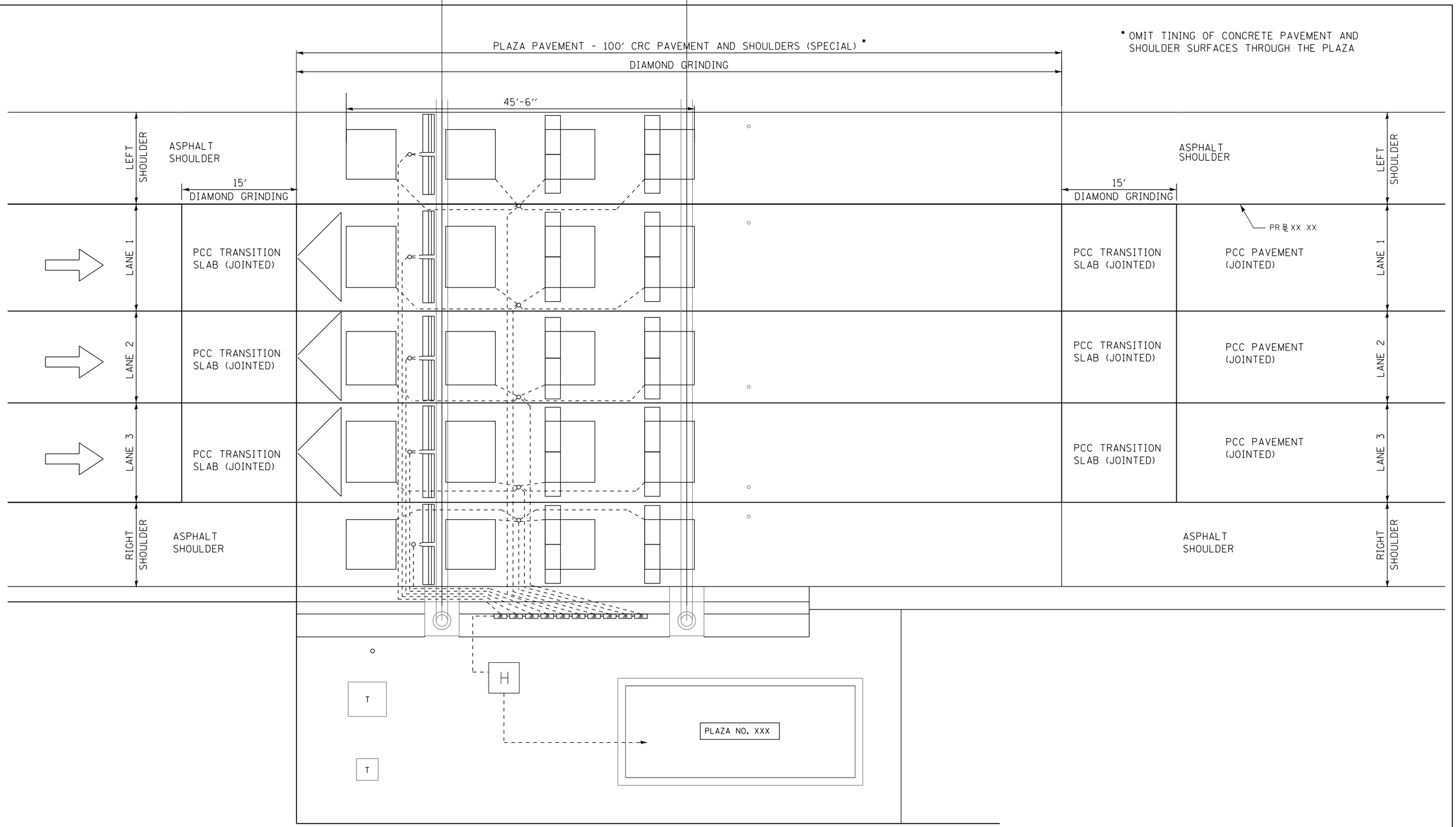

BASE SHEET M-RDY-413

NOTE TO DESIGNER

THIS BASE SHEET SHOWS TYPICAL NEW CONSTRUCTION BUT IT IS NOT A STANDARD DRAWING. IT REQUIRES COMPLETION BY THE DESIGNER PRIOR TO INSERTION INTO A CONTRACT. MICROSTATION FILES AND THE "CADD STANDARDS MANUAL" ARE AVAILABLE ON THE ILLINOIS TOLLWAY WEBSITE. THE DESIGNER SHALL ACCEPT THE RESPONSIBILITY OF THE DESIGN OF THIS SHEET UPON ITS COMPLETION AND INSERTION INTO A CONTRACT. ALL "NOTE TO DESIGNER" BOXES SHALL BE REMOVED BY THE DESIGNER PRIOR TO INSERTION OF THE SHEET INTO THE PLAN SET.

NOTE TO DESIGNER

THIS BASE SHEET SHOWS TYPICAL LONGITUDINAL GROOVING AT THE TOLL PLAZA PAVEMENT, BUT IT IS NOT A STANDARD DRAWING. IT REQUIRES COMPLETION BY THE DESIGNER WITH APPROPRIATE GEOMETRY (LANE CONFIGURATION AND WIDTHS, SHOULDER WIDTHS, ETC.) AND PAVEMENT DESIGN PRIOR TO INSERTION INTO A CONTRACT.
THE DESIGNER SHALL ACCEPT THE RESPONSIBILITY OF THE DESIGN OF THIS SHEET UPON ITS COMPLETION AND INSERTION INTO A CONTRACT.

Illinois Tollway

DIAMOND GRINDING OF PLAZA

DATE
3-1-2020

SUPER ELEVATION DIAGRAM

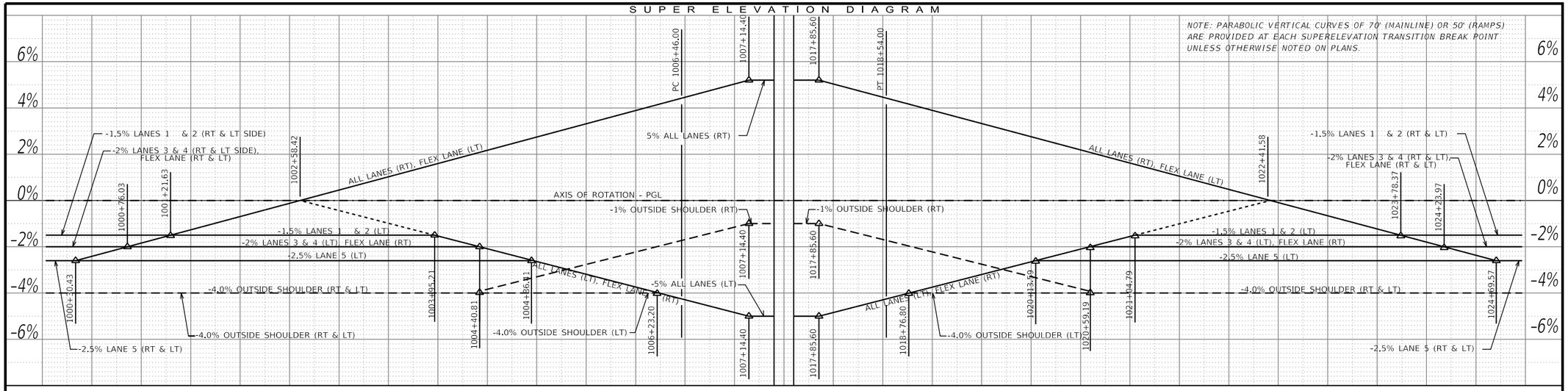

ROADWAY PROFILE

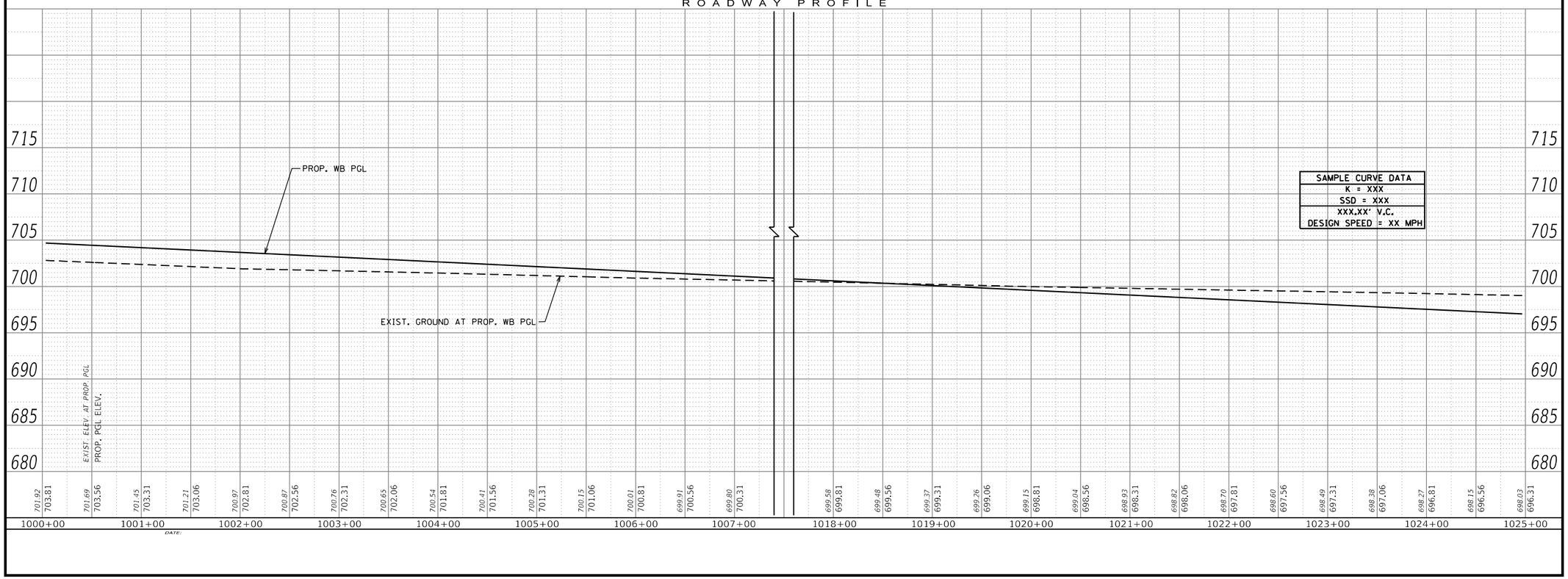

SAMPLE CURVE DATA
K = XXX
SSD = XXX
XXX.XX' V.C.
DESIGN SPEED = XX MPH

DATE:

NOTE TO DESIGNER

REFER TO ROADWAY DESIGN CRITERIA FOR PARABOLIC VERTICAL CURVE REQUIREMENTS AT THE SE TRANSITION POINTS TO MEET PAVEMENT SMOOTHNESS CRITERIA.

NOTE TO DESIGNER

THIS BASE SHEET SHOWS TYPICAL NEW CONSTRUCTION BUT IT IS NOT A STANDARD DRAWING. IT REQUIRES COMPLETION BY THE DESIGNER PRIOR TO INSERTION INTO A CONTRACT. MICROSTATION FILES AND THE "CADD STANDARDS MANUAL" ARE AVAILABLE ON THE ILLINOIS TOLLWAY WEBSITE. THE DESIGNER SHALL ACCEPT THE RESPONSIBILITY OF THE DESIGN OF THIS SHEET UPON ITS COMPLETION AND INSERTION INTO A CONTRACT. ALL "NOTE TO DESIGNER" BOXES SHALL BE REMOVED PRIOR TO INSERTION OF THE SHEET INTO THE PLAN SET.

M-RDY-414

Illinois Tollway

ROADWAY PROFILE & SUPERELEVATION

DATE
3-01-2020

TYPICAL LJS
(FIGURES 1 & 2)

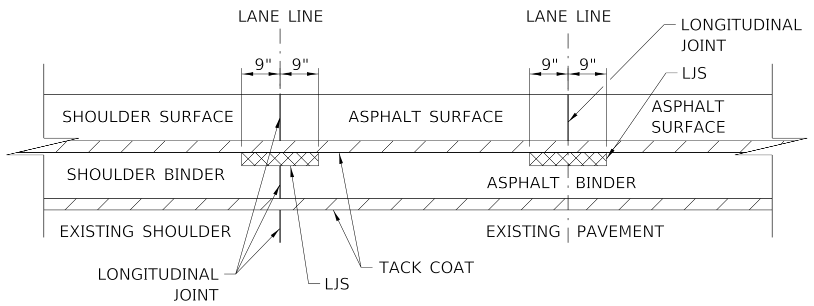

THE LJS APPLICATION SHALL BE CENTERED UNDER THE ASPHALT SURFACE JOINT, LOCATION OF BINDER JOINT MAY VARY.

FIGURE 1
TYPICAL LJS PLACEMENT

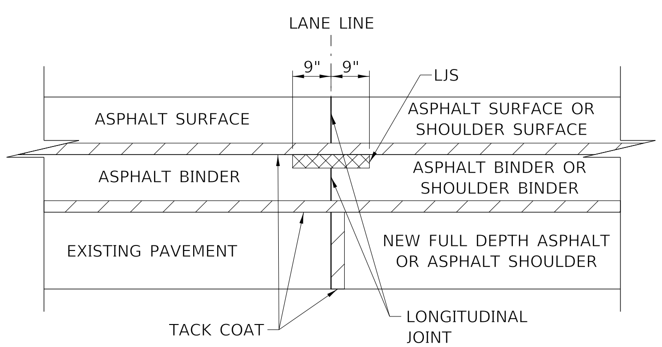

WHERE ASPHALT IS PLACED ACROSS AN EXISTING JOINT OR ACROSS A WIDENING JOINT (TYPICALLY FULL DEPTH ASPHALT OR SHOULDER WIDENING ADJACENT TO EXISTING OR NEWLY CONSTRUCTED PCC), THE LJS SHALL BE CENTERED ACROSS THE EXISTING OR WIDENING JOINT.

FIGURE 2
TYPICAL LJS PLACEMENT - ASPHALT WIDENING

STAGING LJS
(FIGURES 3, & 4)

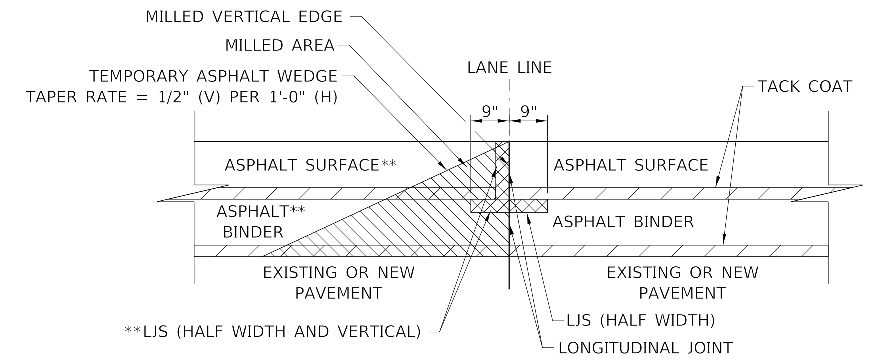

**PLACED DURING SUBSEQUENT STAGE

WHERE 2 LAYERS OF ASPHALT ARE SPECIFIED IN THE PLANS, AND THE LANE(S) ARE REQUIRED TO BE OPENED TO TRAFFIC BEFORE THE FINAL LAYER OF SURFACE IS COMPLETE, PRIOR TO SHIFTING TRAFFIC INTO THE LANE CONFIGURATION SHOWN ON THE PLANS WITH A 2" OR GREATER DROP OFF, A TEMPORARY ASPHALT WEDGE SHALL BE CONSTRUCTED.

WEDGE OPTION, AFTER THE WEDGE IS REMOVED, LJS SHALL BE PLACED AT HALF WIDTH UNDER THE MILLED AREA AT THE LONGITUDINAL JOINT AND ON THE MILLED VERTICAL EDGE.

FIGURE 3
MILLED WEDGE AREA

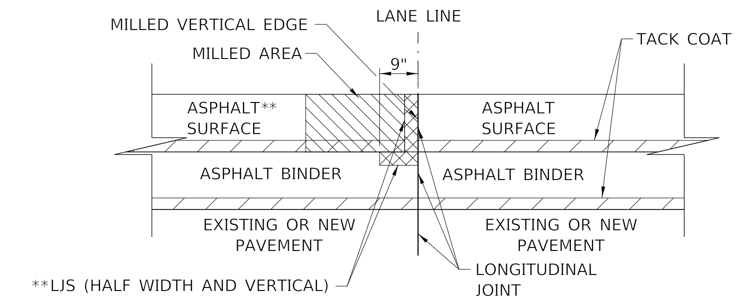

**PLACED DURING SUBSEQUENT STAGE

EXTENDED PAVING OPTION, WHERE ASPHALT SURFACE EXTENDS BEYOND THE UNDERLYING PAVEMENT JOINT. AFTER THE WIDENED SURFACE IS MILLED BACK TO THE JOINT, THE LJS SHALL BE PLACED AT HALF WIDTH UNDER THE MILLED AREA AT THE LONGITUDINAL JOINT AND ON THE MILLED VERTICAL EDGE.

FIGURE 4
MILLED SURFACE LAYER

LONGITUDINAL JOINT SEALANT SCHEDULE OF QUANTITIES

LOCATION	NUMBER OF JOINTS		QUANTITY (FOOT)		
	FULL WIDTH	HALF WIDTH	LONGITUDINAL JOINT SEALANT, FULL WIDTH	LONGITUDINAL JOINT SEALANT, HALF WIDTH	LONGITUDINAL JOINT SEALANT, HALF WIDTH AND VERTICAL
			JI420906	JI420907	JI420908
XXX+XX TO XXX+XX					
TOTAL					

NOTE TO DESIGNER
THIS TABLE SHALL BE ADDED TO THE SCHEDULE OF QUANTITIES AND REMOVED FROM THIS SHEET.

NOTE TO DESIGNER
THIS WORK SHALL CONSIST OF PROVIDING AND PLACING LONGITUDINAL JOINT SEALANT (LJS) ON ASPHALT LONGITUDINAL CONSTRUCTION JOINTS. THE LJS WILL BE PLACED AT PAVING LANE JOINTS BENEATH THE FINAL SURFACE COURSE AS IDENTIFIED IN THE PLANS.

LEGEND

TACK COAT

LONGITUDINAL JOINT SEALANT (LJS)

MILLED AREA

NOTE TO DESIGNER
THIS BASE SHEET SHOWS TYPICAL NEW CONSTRUCTION BUT IT IS NOT A STANDARD DRAWING. IT REQUIRES COMPLETION BY THE DESIGNER PRIOR TO INSERTION INTO A CONTRACT. MICROSTATION FILES ARE AVAILABLE ON THE CTS PROJECTWISE SITE. THE DESIGNER SHALL ACCEPT THE RESPONSIBILITY OF THE DESIGN OF THESE DETAILS UPON ITS COMPLETION AND INSERTION INTO A CONTRACT. ALL "NOTE TO DESIGNER" BOXES SHALL BE REMOVED PRIOR TO INSERTION OF THE DETAILS INTO THE PLAN SET.

Illinois Tollway

LONGITUDINAL JOINT SEALANT

VERSION: 2021-03
STANDARD: M-RDY-415
SHEET: 1 OF 1

PLOT DRIVER: c:\bms\wsp-pb-us-pw-02\wsp__nicholas.laga\d0161165\pdf-ILTollway.pltcfg
PENTABLE: pw:\\wsp-us-pw.bentley.com:wsp-us-pw-02\Documents\Illinois Tollway GEG (9976RR)\zz_Standards\Brad_Hoder\2019\ILTollwayCAD\Tables\Pen\BlackWhite-ILTollway.TBL
PLOT DATE: 3/10/2021 PLOT TIME: 4:40:40 PM
PLOTTED BY: lagans
MODEL NAME: LONGITUDINAL JOINT SEALANT
FILE NAME: pw:\\wsp-us-pw.bentley.com:wsp-us-pw-02\Documents\Illinois Tollway GEG (9976RR)\Standard Drawings and Base Sheets\Base Sheets\Section - M\400 RDY\M-RDY-415.dgn
PLOT SCALE: 0.1667 ' / in. PAGE SIZE: 17x11 (in.)