March 2021

Intelligent Transportation Systems (ITS) Labeling Guide

ILLINOIS STATE TOLL HIGHWAY AUTHORITY

Illinois Tollway

INTRODUCTION

Intelligent Transportation Systems (ITS) Labeling Guide

The Intelligent Transportation Systems (ITS) Labeling Guide provides guidance on the Illinois Tollway standards for the labelling of ITS assets. The manual's content provides a detailed listing of criteria, guidelines, policies and procedures to be followed during the documentation of ITS and communication equipment deployed and maintained along the Illinois Tollway system. This includes, but is not limited to, equipment racks, patch panels, optical fiber panels, cables, field cabinets, grounding busbars, ITS devices, bonding conductors and terminal panel boards.

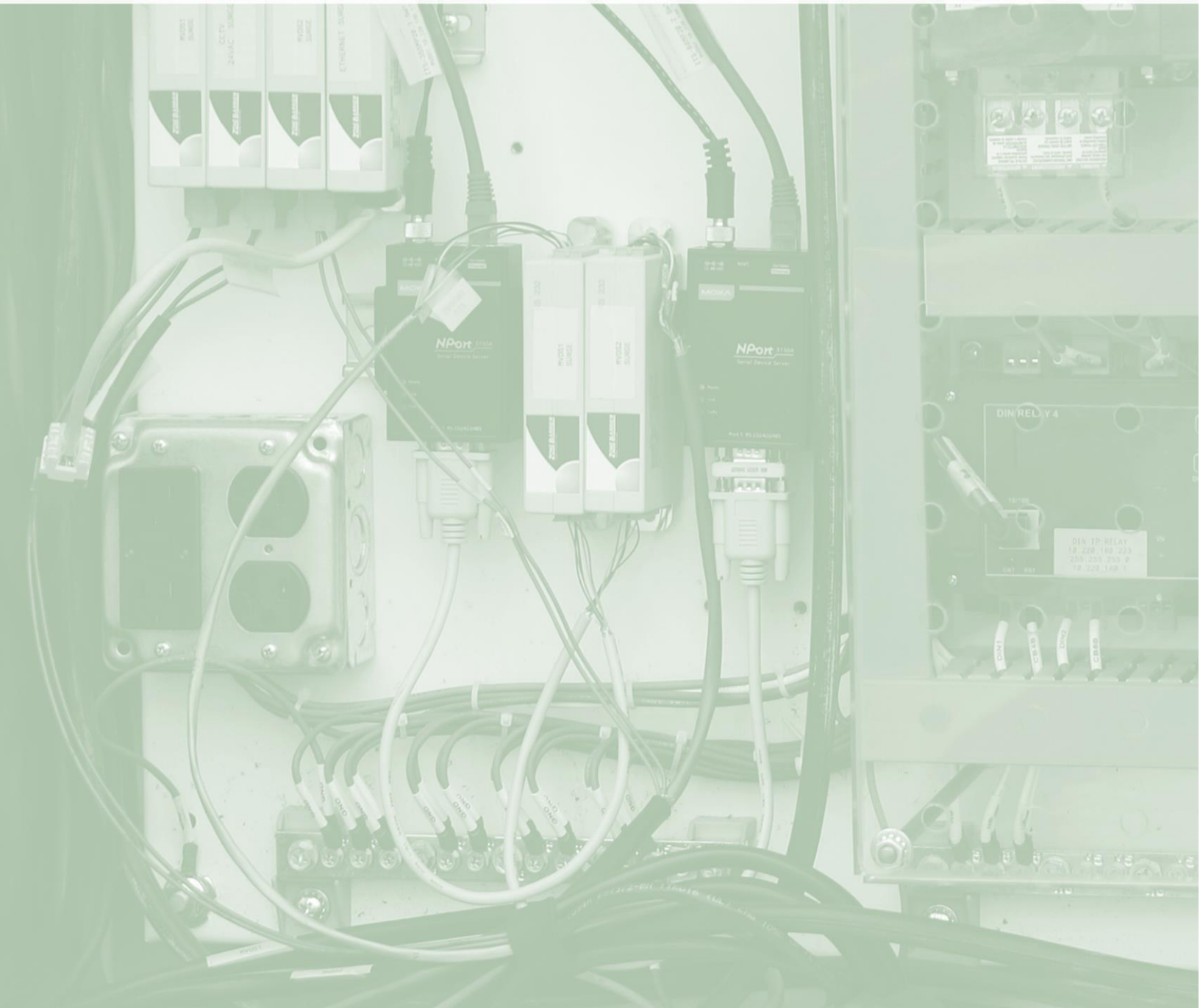

ILLINOIS STATE TOLL HIGHWAY AUTHORITY

The Intelligent Transportation Systems (ITS) Labeling Guide dated March 2021 replaces the ITS Labeling Guidelines dated March 2020.

Major Revision Highlights

- Section 4.12: Clarified cabinet label location
- Section 4.13: IP address labeling requirement for IP relays and cameras

TABLE OF CONTENTS

SECTION 1.0 INTRODUCTION 1

1.1 ITS Labeling Guide Purpose 1

1.2 Terms and Definitions 1

1.3 Acronyms 2

SECTION 2.0 GENERAL 4

2.1 Scope of Work 4

2.1.1 References 4

2.1.2 Label Identifiers 5

2.1.3 Submittals 5

SECTION 3.0 PRODUCTS (MATERIALS) 6

3.1 Labels 6

3.2 Labeling Equipment 7

SECTION 4.0 EXECUTION 8

4.1 General Installation Requirements 8

4.2 Cabinet/Equipment Rack 8

4.3 Communications/Network Equipment 8

4.4 Fiber Termination Shelf/Panel 9

4.5 Fiber Optic and Copper Cabling (Backbone & Drop) 10

4.6 Patch Cords 10

4.7 Copper Patch Panel 11

4.8 Copper Building Entrance Terminal (BET) 11

4.9 Ground Busbar 12

4.10 Bonding Conductor 13

4.11 Terminal Panel Boards 13

4.12 Field/Site Spaces 14

4.13 ITS Device Labeling 15

4.14 Coaxial Drop Cable 15

4.15 Automatic Vehicle Identification (AVI) Drop Cable 16

4.16 Power Cable 16

4.17 Service Record 17

APPENDIX A 18

APPENDIX B 44

SECTION 1.0 INTRODUCTION

1.1 ITS Labeling Guide Purpose

The ITS Labeling Guide is intended to be a stand-alone package to be followed by an ITS Contractor during construction and by an ITS Design Engineer while developing ITS plans for construction. These guidelines are also intended to be observed for ongoing ITS maintenance activities related to the Illinois Tollway ITS infrastructure.

1.2 Terms and Definitions

ADMINISTRATION - The process of documenting the initial cabling, wiring and management of the cabling/wiring system after the installation. It typically includes two major components: a standard labeling system and a records system.

BACKBONE CABLE - The primary cabling system that extends and runs between plaza buildings along the Illinois Tollway.

BUILDING -- A building is a plaza (mainline or ramp) facility that can include a telecommunications room, equipment room and/or other work areas.

CABLE -- An assembly of one or more insulated conductors or optical fibers, within an enveloping sheath.

CABLING -- A combination of all cables, jumpers, cords, and connecting hardware.

CONTRACTOR -- A person or company that undertakes a contract to provide materials and/or labor to perform a service or do a job.

DROP CABLE – Cable between the splice enclosure or termination panel at an ITS device/field cabinet and the backbone cable providing connection to the network.

EQUIPMENT ROOM (ER) - An area within a plaza building where major components (Cisco ONS, etc.) are housed. Equipment rooms are often distinct from telecommunications rooms/closets due to the size and quantity of the equipment they contain.

IDENTIFIERS -- An identifier is used in labeling telecommunications infrastructure components such as cable, racks, telecommunications rooms, equipment rooms, pathways and telecommunications outlets. It is a unique set of number, letters or a combination of both, that are not repeated within the administration of the system. Identifiers are inserted onto a label which is affixed to the component or cable it is identifying.

LABELING -- Labeling is the marking of an element of a telecommunications infrastructure with the appropriate identifier and other relevant information. Labeling may occur in two ways. Labels may be securely attached to the element, or, the element itself may be marked directly.

OUTSIDE PLANT -- Telecommunications infrastructure designed for installation exterior to plaza and other buildings.

PATCH CORD - A length of cable/wire, or fiber cable, with connectors on each end used to join telecommunications circuits and equipment.

PATHWAY - A conduit, raceway, sleeve, or exposed location for the placing of a cable.

PHENOLIC – A plastic, engravable tag of a material designed to withstand external environmental and UV exposure.

RECORDS -- A record is a grouping of information about a specific element of a telecommunications system. The record will be contained in a database or excel spreadsheet which may be searched and sorted according to the requirements of the users.

TELECOMMUNICATIONS INFRASTRUCTURE - The components (telecommunications spaces, cable pathways, grounding, wiring and termination hardware) that together provide the basic support for the distribution of all telecommunications information.

TELECOMMUNICATIONS GROUNDING BUSBAR (TGB) - Auxiliary grounding for the telecommunications in a TS/room that does not have a grounding source and is connected to the TMGB by a grounding conductor. It is also used to ground all telecommunications equipment and cabling that requires a grounding connection.

TELECOMMUNICATIONS MAIN GROUNDING BUSBAR (TMGB) - Primary grounding for the entire telecommunications in a plaza building or structure. It is tied directly to the grounding source and is used to ground all telecommunications equipment and cabling that require a grounding connection.

TELECOMMUNICATIONS ROOM (TR) - The space in a plaza building designed to provide a secure, suitable environment for the installation of cable, equipment, and termination and administration systems. Telecommunications rooms are the points where the backbone and other distribution facilities intersect. They are rooms whose function is to terminate and connect the backbone cable system to the network equipment and to house electronics that assist in the distribution of information to that plaza facility.

TELECOMMUNICATIONS SPACE (TS) - A telecommunications space is an area used for housing the installation and termination of equipment and cable, e.g., equipment rooms, telecommunications rooms, field cabinets/enclosures, and handholes.

1.3 Acronyms

ANSI – American National Standards Institute

AVI – Automatic Vehicle Identification

BICSI – Building Industry Consulting Service International

BET – Building Entrance Terminal

DVR – Digital Video Recorder

EIA – Electronics Industries Alliance

ER – Equipment Room

IEEE – Institute of Electrical and Electronics Engineers

NEC – National Electrical Code

NFPA – National Fire Protection Association

ONS – Optical Networking Services

RCDD – Registered Communications Distribution Designer

TIA – Telecommunications Industries Association

TR – Telecommunications Room

UL – Underwriters' Laboratories

SECTION 2.0 GENERAL

The purpose of this Section is to provide a minimum level of ITS labeling requirements and guidelines along with application examples to support consistent and manageable documentation of ITS and communication equipment deployed and maintained along the Illinois Tollway corridors.

Equipment racks, patch panels, optical fiber panels, cables, field cabinets, grounding busbars, ITS devices, bonding conductors, and terminal panel boards must be properly labeled as specified herein.

2.1 Scope of Work

Work covered by this Section shall consist of furnishing labor, equipment, supplies, and materials unless otherwise specified, and in performing the following operations recognized as necessary for the labeling of the ITS infrastructure.

Labeling shall be provided for the following cabling and equipment as required by the Contract Special Provisions and Plan Drawings:

1. ITS cabinet/equipment racks.
2. Communications/network equipment.
3. Fiber termination shelves.
4. Fiber optic and copper cables (backbone & drop).
5. Fiber optic and copper patch cords.
6. Copper patch panels.
7. Copper building entrance terminals.
8. Ground busbars.
9. Bonding conductors.
10. Terminal panel boards.
11. Field/site space.
12. ITS Device.

2.1.1 References

A. The Contractor shall label all required components and materials as specified in the Contract Special Provisions and Plans to conform to all applicable industry codes, standards and guidelines including, but not limited to the following:

1. BICSI TDMM (Telecommunications Distribution Methods Manual), latest edition.

2. BICSI OSPDRM (Outside Plant Design Reference Manual), latest edition.

3. ANSI/TIA/EIA 606-A and 606-B, Administration Standard for Commercial Telecommunications Infrastructure.

4. UL 969, latest edition, Marking & Labeling Systems.

5. NFPA-70 NEC (National Electrical Code). Current adopted edition enforced by the Authority Having Jurisdiction (AHJ.)

6. ANSI/IEEE C2-2007 National Electrical Safety Code, latest edition.

B. Where conflicts occur between codes and standards or between codes and standards and Contract Specifications and Plans, the one establishing the more stringent requirements shall be followed.

2.1.2 Label Identifiers

A. Contractor shall refer to Appendix A of this Document for examples of infrastructure system cable, component and equipment labeling methods and techniques.

B. Contractor shall refer to Appendix B of this Document for list of component and equipment labeling identifiers to be used in infrastructure system labels and tags.

2.1.3 Submittals

A. All labeling materials, equipment and methods shall be submitted to the Illinois Tollway for review and approval prior to any labeling work taking place.

B. Contractor shall submit to the Illinois Tollway for review and approval the following labeling materials:

1. Labeling materials.

2. Labeling equipment and methods to be used.

C. Contractor shall submit to the Illinois Tollway for review and approval labeling examples for each type of equipment and/or material to be labeled as specified herein.

D. Contractor shall refer to the Contract Special Provisions for additional submittal requirements.

SECTION 3.0 PRODUCTS (MATERIALS)

3.1 Labels

ITS labeling shall meet the following minimum labeling requirements:

A. Prepare labeling per TIA/EIA-606-B (Class 3 Administration) and UL 969 for a system of labeling materials, including label stocks, laminating adhesives, and inks used by label printers.

B. Labeling shall be provided for each of the items (at a minimum) indicated below or as directed by the Illinois Tollway:

1. Racks inside mainline plaza/ramp plaza/other buildings shall be labeled.

2. Network and communications devices & equipment shall be labeled.

3. Telecommunications/equipment rooms as well as field cabinets/enclosures shall be labeled.

4. Fiber termination shelves, patch panels and ports shall be labeled. Fiber termination shelf covers shall also include fiber cable labels of cables terminated in the shelf.

5. Copper building entrance terminals shall be labeled including all cables terminated inside the terminal.

6. Fiber optic and copper backbone & drop cables shall be labeled on both ends close to termination point and at access points (handholes, etc.).

7. Patch cords shall be labeled.

8. Ground busbars and bonding conductors shall be labeled.

C. All labels shall meet the exposure (inside or outside), legibility, defacement and adhesion requirements (as applicable and depending on its location) as specified in UL 969 and herein.

D. All labels shall be printed or generated by a “mechanical device” (i.e., handheld/portable systems, or a tabletop laser, inkjet, or thermal-transfer printer). Handwritten labels are not acceptable.

E. The size, color and contrast of all labels should be selected to ensure that the identifiers are easily read.

F. Labels shall include appropriate bold font w/o serifs and be upper case (all capital letters).

G. Labels shall use black ink print on white background unless otherwise noted herein and approved by the Illinois Tollway.

H. Unless otherwise specified herein, lettering size in general shall be as large as practical to fit properly on the label. The intent is for labels to be easily read while standing near the rack or field cabinet. No lettering shall be smaller than 12 point (approx. ⅛-inch tall characters) unless otherwise directed by the Illinois Tollway.

I. Labels shall be consistent, provide contrast, be permanently printed and clearly visible during the installation of, and normal maintenance of, the infrastructure and equipment.

J. Printed labels shall be durable, long-lasting and resistant to the environmental conditions (such as moisture, heat, UV, etc.) as required by its location and shall have a design life equal to or greater than that of the labeled component.

K. Labels affixed to cables shall be flexible and allow for cable movements, bending and twisting.

L. Labels shall use aggressive adhesives or connectors that stay attached even to the most difficult to adhere to jacketing.

3.2 Labeling Equipment

Contractor/installer shall utilize the proper labeling equipment providing the following minimum capabilities:

1. Capable of printing labels on smooth, textured, flat and curved surfaces.

2. Capable of working with multiple types of label materials, as required.

3. Capable of generating labels that are durable, long-lasting and resistant to UV, extreme temperatures, solvents, chemicals and moisture as required per label location.

4. Capable of printing large batches, as required.

5. Capable of providing vertical wrapping and label spacing.

SECTION 4.0 EXECUTION

4.1 General Installation Requirements

A. Qualifications: The field technicians must have experience using the labeling equipment and labeling administrative documentation.

B. The Contractor shall apply/implement labels using the application examples as provided in Appendix A and specified herein using the ITS labeling identifiers as provided in Appendix B.

4.2 Cabinet/Equipment Rack

Cabinet/Equipment Rack labeling shall include the following:

A. All cabinets/equipment racks shall be labeled as approved by the Illinois Tollway (see Figure A-1 in Appendix A for example application). Contractor shall also refer to Contract Plans and Details for Room Layout Drawing showing layout of existing cabinets/racks, locations and configuration.

B. All labeling shall follow ITS Labeling Identifiers as shown in Appendix B.

C. Labels shall be Phenolic (plastic) tag types.

D. Labels shall be black ink print on white background.

E. All letters on labels and identifiers shall be capital letters.

F. Labels shall fasten to the top of cabinet/rack on both the cabinet/rack face and on the rear. Labels shall be centered on the cabinet/rack.

G. Phenolic (plastic) tag shall be no less than 2-inches tall and label letters/numbers shall be no less than 1 ½-inches tall. If rack face is less than 2-inches, phenolic (plastic) tags shall be same height as cabinet/rack face; tag shall have ¼-inch space at top and bottom of phenolic (plastic) tag and label letters/numbers shall be as tall as remaining space allows.

H. Cabinets/racks shall be labeled in sequence starting from “1” from left to right and moving backwards upon entry into the room or as directed by the Illinois Tollway.

I. Cabinets/racks shall be labeled with cabinet/rack System/Owner identifiers, in accordance with Illinois Tollway Standards and approval.

4.3 Communications/Network Equipment

Communications/network equipment labeling shall include the following:

A. All communications/network devices and equipment shall be labeled as approved by the Illinois Tollway (see Figure A-2 in Appendix A for additional requirements and application example).

B. All labeling shall follow ITS Labeling Identifiers as shown in Appendix B.

C. Labels shall be Phenolic (plastic) tag types.

D. Labels shall be black ink print on white background.

E. All letters on labels and identifiers shall be capital letters.

F. Labels shall be on device/equipment face in upper left corner with device/equipment identifier. Multiple devices/equipment shall be labeled sequentially from top to bottom.

G. If device or equipment has no surface area for affixing label, label shall be affixed to device/equipment rack mounting tabs.

4.4 Fiber Termination Shelf/Panel

Fiber termination shelf/panel and port labeling shall include the following:

A. All fiber termination shelves, panels and ports shall be labeled (see Figure A-3 in Appendix A for additional requirements and application example).

B. All labeling shall follow ITS Labeling Identifiers as shown in Appendix B.

C. Labels shall be Phenolic (plastic) tag types.

D. Labels shall be black ink print on white background.

E. All letters on labels and identifiers shall be capital letters.

F. Fiber termination shelf shall be labeled on shelf cover in upper left corner with shelf identifiers. Multiple fiber termination shelves in rack shall be labeled sequentially. Fiber termination shelves shall be labeled sequentially depending on their location within the rack starting with “A” from the top of rack going downward.

G. Fiber termination shelf shall be labeled on the shelf cover with cable labels of all cables terminated in the fiber termination shelf.

H. Fiber termination panels shall be labeled above each panel with panel identifier. Panels shall be labeled A through M, skipping the letter I starting from the left moving to the right.

I. All panel ports shall be labeled sequentially with a port identifier starting from the top left row and moving to the right and downward.

J. Fiber termination shelf, panel and port labels, pre-labeled from the manufacturer may be used in lieu of manual labeling, as long as manufacturer labels are clearly visible and distinguishable by marking. Etched manufacturer labels, with no color distinction from the surface labels is etched into, shall be labeled over per labeling specifications.

4.5 Fiber Optic and Copper Cabling (Backbone & Drop)

Fiber optic and copper backbone and drop cable labeling shall include the following:

A. All fiber optic and copper backbone and drop cables shall be labeled (see Figures A-4, A-5, A-13, A-14 in Appendix A for additional requirements and application examples).

B. All labeling shall follow ITS Labeling Identifiers as shown in Appendix B.

C. Labels shall be mechanically imprinted, smear resistant, fade resistant, wrap around, self-laminating type.

D. Labels shall be black ink print on white background for backbone cables and black ink print on yellow or orange background for drop cables.

E. All letters on labels and identifiers shall be capital letters.

F. Labels shall be placed no closer than 12-inches from point of entry into fiber and copper patch panel/termination equipment or splice case.

G. Fiber and copper backbone and drop cables shall be labeled at the point of entry into cable tray or ladder rack from the outside, inside a TR or ER in a mainline/ramp plaza building.

H. Cables located in handholes shall have their sheaths labeled at entry and exit points and in at least one location on the service loop that is visible from grade level. For handholes containing a splice enclosure the cable(s) shall be labeled on each side of the splice enclosure.

I. Labels shall clearly visible/viewable from point of final resting orientation.

J. Labels shall be two (2) lines of text. First line shall have near-end building information. Second line shall have far-end building information followed by cable type and strand/pair count.

4.6 Patch Cords

Patch cord labeling shall include the following:

A. All patch cords shall be labeled on each end (see Figures A-6 to A-8 and A-15 to A-17 in Appendix A for additional requirements and application examples).

B. All labeling shall follow ITS Labeling Identifiers as shown in Appendix B.

C. Labels shall be mechanically imprinted, smear resistant, fade resistant, wrap around, self-laminating type.

D. Labels shall be black ink print on white background.

E. All letters on labels and identifiers shall be capital letters.

F. Labels shall be placed no closer than 6-inches from connection point.

G. Labels shall clearly visible/viewable from point of final resting orientation.

4.7 Copper Patch Panel

Copper patch panel labeling shall include the following:

A. All copper patch panels shall be labeled (see Figure A-18 in Appendix A for additional requirements and application example).

B. All labeling shall follow ITS Labeling Identifiers as shown in Appendix B.

C. Labels shall be Phenolic (plastic) tag types.

D. Labels shall be black ink print on white background.

E. All letters on labels and identifiers shall be capital letters.

F. Copper patch panel shall be labeled on patch panel cover on left side with patch panel identifier.

G. Label shall be centered on patch panel. Multiple patch panels in cabinet/rack shall be labeled sequentially from top to bottom.

H. All patch panels shall be labeled.

I. Patch panel ports shall be labeled with port identifier.

J. Patch panel and port labels, pre-labeled from the manufacturer may be used in lieu of manual labeling, as long as manufacturer labels are clearly visible and distinguishable by marking. Etched manufacturer labels, with no color distinction from the surface label is etched into, shall be labeled over per labeling specifications.

4.8 Copper Building Entrance Terminal (BET)

Copper building entrance terminal (BET) labeling shall include the following:

A. All copper BET shall be labeled (see Figure A-19 in Appendix A for additional requirements and application example).

B. Labels shall be Phenolic (plastic) tag types.

C. Labels shall be black ink print on white background.

D. All letters on labels and identifiers shall be capital letters.

E. BET shall be labeled on BET cover with BET identifier (see Appendix B). Label shall be phenolic tag type. Phenolic tag shall be no less than 2-inches tall and label letters/numbers shall be no less than 1 ½-inches tall. Label shall be black print on white background. Label shall be fastened to BET cover and centered near top of BET. Multiple BET's shall be labeled sequentially. All BET's shall be labeled.

F. BET's shall be labeled on BET cover with cable labels of all cables terminated in the BET. Labels shall be phenolic tag type. Phenolic tag shall be no less than 1-inch tall and label letters/numbers shall be no less than ½-inch tall. Labels shall be black print on white background. Labels shall be fastened to BET cover on left side of BET. All cables terminated in BET's shall be labeled.

G. Inside the BET shall be labeled with label strip. Label strip shall indicate first termination pair and every fifth termination pair. First level backbone label strips shall be black print on white background. Second level backbone label strips shall be black print on gray background. Label strips, pre-labeled from manufacturer may be used in lieu of manual labeling, as long as manufacturer labels are clearly visible and distinguishable by marking.

4.9 Ground Busbar

Ground busbar labeling shall include the following:

A. All grounding busbars shall be labeled (see Figure A-9 in Appendix A for additional requirements and application example).

B. All labeling shall follow ITS Labeling Identifiers as shown in Appendix B.

C. Labels shall be Phenolic (plastic) tag types.

D. Labels shall be black ink print on green background for grounding applications and black on red background for warning applications.

E. All letters on labels and identifiers shall be capital letters.

F. Labels shall be fastened to side of the TMGB or TGB, so as to keep the label from being covered up by bonding conductor and/or connections.

G. Labels shall be level with the top of the TMGB or TGB.

H. Phenolic tags shall be no less than 2-inches tall and label letters/numbers shall be no less than 1 ½-inches tall.

4.10 Bonding Conductor

Bonding conductor labeling shall include the following:

A. Bonding conductor labels:

1. All bonding conductors shall be labeled (see Figure A-10 in Appendix A for additional requirements and application example).
2. All labeling shall follow ITS Labeling Identifiers as shown in Appendix B.
3. Labels shall be placed no closer than 6-inches from point of bonding connection to the grounding busbar.
4. Labels shall be clearly visible/viewable from point of final resting orientation.
5. Labels shall be mechanically imprinted, smear resistant, fade resistant, wrap around, self-laminating type.
6. Labels shall be black print on white background.
7. All letters on labels shall be capital letters.

B. Warning labels:

1. All bonding conductors shall have warning labels.
2. All labeling shall follow ITS Labeling Identifiers as shown in Appendix B.
3. Labels shall be placed near bonding conductor label.
4. Labels shall be thermal marker transfer plate type.
5. Warning labels shall be black print on red background.
6. All letters in warning labels shall be capital letters.
7. Warning labels shall indicate who to contact if bonding conductor is loose, disconnected, needs to be moved or needs to be removed.

4.11 Terminal Panel Boards

Terminal Panel Board labeling shall include the following:

A. All terminal panel boards shall be labeled (see Figure A-11 in Appendix A for additional requirements and application example).

B. All labeling shall follow ITS Labeling Identifiers as shown in Appendix B.

C. Labels shall be Phenolic (plastic) tag type.

D. Labels shall be black ink print on white background.

E. All letters on labels and identifiers shall be capital letters.

F. Labels shall be fastened to side of the terminal panel board, so as to keep the label from being covered up by cables, conductors and/or connections.

G. Labels shall be level with the top of the terminal panel board.

H. Phenolic tags shall be no less than 1 ½-inches tall and label letters/numbers shall be no less than 1-inch tall.

I. Terminal Panel Boards shall be labeled sequentially from top to bottom.

4.12 Field/Site Spaces

Field/site spaces (i.e., field cabinets, enclosures, etc.) labeling shall include the following:

A. All field/site spaces shall be labeled as approved by the Illinois Tollway (see Figure A-12 in Appendix A for additional requirements and example application).

B. All labeling shall follow ITS Labeling Identifiers as shown in Appendix B.

C. Labels shall be Phenolic (plastic) tag type.

D. Labels shall be black print on white background.

E. All letters on labels and identifiers shall be capital letters.

F. Field cabinet/enclosure labels shall be phenolic tag types and secured to field cabinet/enclosure door appropriate for its location (i.e., outdoor or indoor, etc.).

G. Labels shall be applied to the outside top of the door or if space does not permit, then locate at the top left corner of the door face.

H. Phenolic tag shall be no less than 2-inches tall and label letters/numbers shall be no less than 1 ½-inches tall. Tag shall have ¼-inch space at top and bottom of phenolic tag and label letters/numbers shall be as tall as remaining space allows.

I. All cables inside handholes/maintenance holes shall be labeled within 12-inches of all entry/exit points.

J. All circuit breakers within ITS enclosures shall be labeled with the device powered by that breaker (e.g. “CCTV1”, “CCTV2”, “MVDS1”, “MVDS2”, “RELAY”, “SPARE”, etc.).

4.13 ITS Device Labeling

Device (e.g., cameras, MVDS, DMS, RWIS, WIM, etc.) labeling shall include the following:

A. All devices shall be labeled (see Figure A-20 in Appendix A for additional requirements and application example).

B. All labeling shall follow ITS Labeling Identifiers as shown in Appendix B.

C. Labels shall be Phenolic tag type.

D. Label shall be black print on white background.

E. All letters on labels and identifiers shall be capital letters.

F. Labels shall be affixed to cameras so labels are in visible area.

G. Multiple devices and equipment shall be labeled sequentially.

H. IP Relays and CCTV PoE injectors shall be labeled with the last two octets of the devices' respective IP addresses.

4.14 Coaxial Drop Cable

Coaxial drop cable labeling shall include the following:

A. All coaxial drop cabling shall be labeled (see Figure A-21 in Appendix A for additional requirements and application example).

B. All labeling shall follow ITS Labeling Identifiers as shown in Appendix B.

C. Labels shall be placed no closer than 12-inches from point of connection into DVR or camera.

D. Labels shall clearly visible/viewable from point of final resting orientation.

E. Labels shall be mechanically imprinted, smear resistant, fade resistant, wrap around, self-laminating type.

F. Labels shall be two lines of text. First line shall have near-end component/equipment information. Second line shall have far-end component/equipment information followed by cable type and cable series.

G. Labels shall be black print on white background.

H. All letters on labels and identifiers shall be capital letters.

4.15 Automatic Vehicle Identification (AVI) Drop Cable

AVI drop cable labeling shall include the following:

A. All AVI drop cabling shall be labeled (see Figure A-22 in Appendix A for additional requirements and application example).

B. All labeling shall follow ITS Labeling Identifiers as shown in Appendix B.

C. Labels shall be placed no closer than 12-inches from point of connection into AVI controller or receiver.

D. Labels shall clearly visible/viewable from point of final resting orientation.

E. Labels shall be mechanically imprinted, smear resistant, fade resistant, wrap around, self-laminating type.

F. Labels shall be two lines of text. First line shall have near-end component/equipment information. Second line shall have far-end component/equipment information followed by cable type and cable series.

G. Labels shall be black print on white background.

H. All letters on labels and identifiers shall be capital letters.

4.16 Power Cable

Power cable labeling shall include the following:

A. All power cabling shall be labeled (see Figure A-23 in Appendix A for additional requirements and application example).

B. All labeling shall follow ITS Labeling Identifiers as shown in Appendix B.

C. Labels shall be placed no closer than 12-inches from point of connection into power supply or equipment powered.

D. Labels shall clearly visible/viewable from point of final resting orientation.

E. Labels shall be mechanically imprinted, smear resistant, fade resistant, wrap around, self-laminating type.

F. Labels shall be two lines of text. First line shall have near-end component/equipment information. Second line shall have far-end component/equipment information followed by cable type and cable series.

G. Labels shall be black print on white background.

H. All letters on labels and identifiers shall be capital letters.

4.17 Service Record

New cabinets shall include a label affixed to the inside of the door indicating:

A. The manufacturer

B. Date of manufacture

C. Installation contract

APPENDIX A

ITS LABELING APPLICATION EXAMPLES

LABELING APPLICATION EXAMPLES

The figures referred to in Table # 1 provide examples on the application of labels as specified herein.

Table # 1: Labeling Scheme Application Examples

Identifier	Labeling Application Example
Cabinet/Equipment Rack Labeling Scheme	See Figure A-1
Comm/Network Equipment Labeling Scheme	See Figure A-2
Fiber Termination Shelf Labeling Scheme - Horizontal & Vertical Fiber Termination Shelves	See Figure A-3
Fiber Optic Backbone & Drop Cable Labeling Scheme - Building to Building	See Figure A-4
Fiber Optic Backbone & Drop Cable Labeling Scheme - Building to Field Location	See Figure A-5
Fiber Optic Patch Cord Labeling Scheme - Device/Equipment to Fiber Termination Shelf	See Figure A-6
Fiber Optic Patch Cord Labeling Scheme - Device/Equipment to Device/Equipment Patch Cord	See Figure A-7
Fiber Optic Patch Cord Labeling Scheme - Fiber Termination Shelf to Fiber Termination Shelf	See Figure A-8
Ground Busbar Labeling Scheme	See Figure A-9
Bonding Conductor Labeling Scheme	See Figure A-10
Terminal Panel Board Labeling Scheme	See Figure A-11
Field/Site Space Labeling Scheme	See Figure A-12
Copper Backbone/Drop Cable Labeling Scheme - Building to Building	See Figure A-13
Copper Backbone & Drop Cable Labeling Scheme - Building to Field Location	See Figure A-14
Copper Patch Cord Labeling Scheme- Patch Panel to Patch Panel	See Figure A-15
Copper Patch Cord Labeling Scheme - Device/Equipment to Device/Equipment Patch Cord	See Figure A-16

Identifier	Labeling Application Example
Copper Patch Cord Labeling Scheme - Device/Equipment to Patch Panel	See Figure A-17
Copper Patch Panel Labeling Scheme	See Figure A-18
Copper Building Entrance Terminal (BET) Labeling Scheme	See Figure A-19
Device Labeling Scheme	See Figure A-20
Coaxial Drop Cable Labeling Scheme	See Figure A-21
Automatic Vehicle Identification (AVI) Drop Cable Labeling Scheme	See Figure A-22
Power Cable Labeling Scheme	See Figure A-23

RACK
LABELING
INFORMATION

ITS-R1

RACK SYSTEM/OWNER

"RACK"

SEQUENTIAL RACK NUMBER

RACK LABEL

ITS-R1

CABINET
LABELING
INFORMATION

ITS-C1

CABINET SYSTEM / OWNER

"CABINET"

SEQUENTIAL CABINET NUMBER

CABINET LABEL

ITS-C1

EXAMPLE OF
LABELED RACK

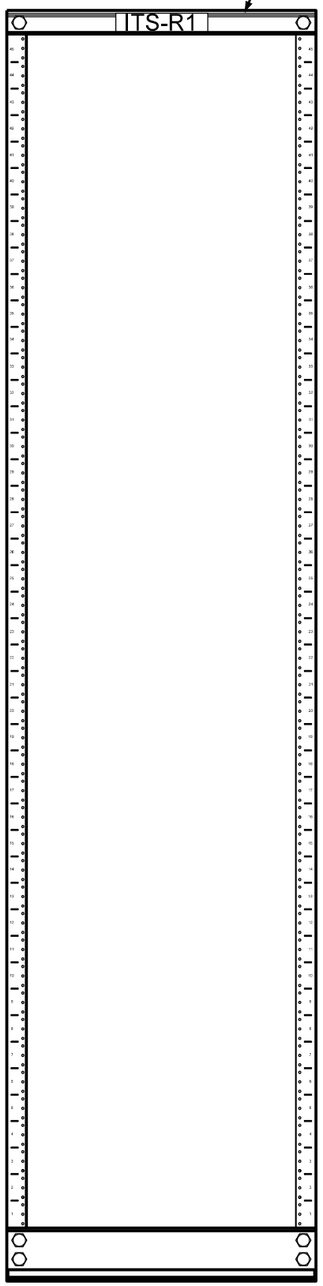

EXAMPLE OF
LABELED CABINET

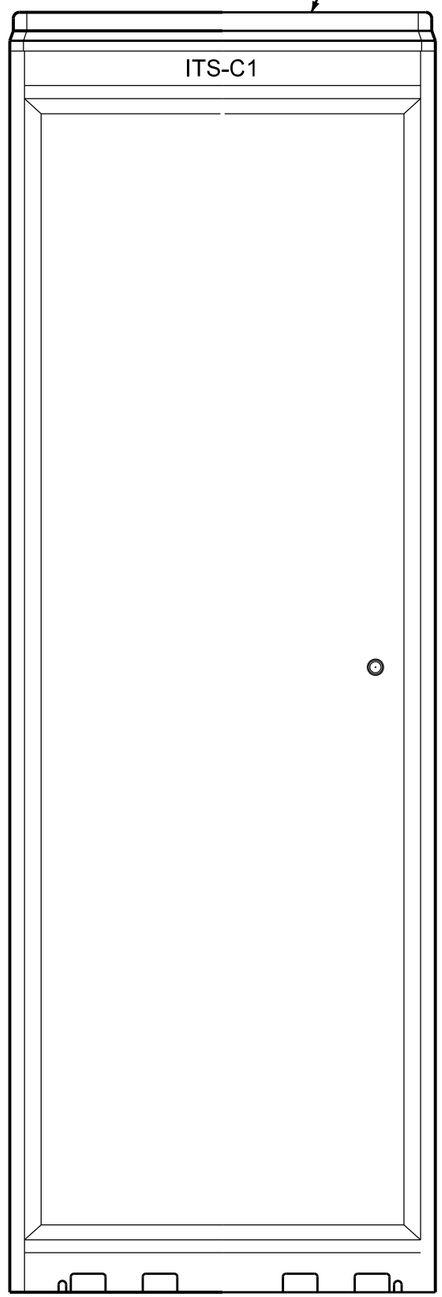

NOTES:

1. ALL CABINETS/RACKS SHALL BE LABELED.
2. LABEL SHALL BE PHENOLIC TAG TYPE.
3. LABEL SHALL BE BLACK PRINT ON WHITE BACKGROUND.
4. ALL LETTERS IN LABELS AND IDENTIFIERS SHALL BE CAPITAL LETTERS.
5. LABELS SHALL BE FASTENED TO TOP OF CABINET/RACK ON CABINET/RACK FACE. LABEL SHALL BE CENTERED ON CABINET/RACK.
6. PHENOLIC TAG SHALL BE NO LESS THAN 2 INCHES TALL AND LABEL LETTERS/NUMBERS SHALL BE NO LESS THAN 1.5 INCHES TALL. IF CABINET/RACK FACE IS LESS THAN 2 INCHES, PHENOLIC TAG SHALL BE SAME HEIGHT AS CABINET/RACK FACE; TAG SHALL HAVE 1/4 INCH SPACE AT TOP AND BOTTOM OF PHENOLIC TAG AND LABEL LETTERS/NUMBERS SHALL BE AS TALL AS REMAINING SPACE ALLOWS.

Illinois Tollway

FIGURE A-1: CABINET / EQUIPMENT RACK LABELING SCHEME

REFER TO APPENDIX B - ITS LABELING IDENTIFIERS FOR FULL LIST OF BUILDING, CABLE, AND EQUIPMENT IDENTIFICATION INFORMATION

NOTES:
1. ALL DEVICES & EQUIPMENT SHALL BE LABELED.
2. LABEL SHALL BE BLACK PRINT ON WHITE BACKGROUND.
3. ALL LETTERS IN LABELS AND IDENTIFIERS SHALL BE CAPITAL LETTERS.
4. LABELS SHALL BE FASTENED TO TOP OF RACK ON RACK FACE. LABEL SHALL BE CENTERED ON RACK.
5. DEVICES & EQUIPMENT SHALL BE LABELED ON DEVICE/EQUIPMENT FACE IN UPPER LEFT CORNER WITH DEVICE/EQUIPMENT IDENTIFIER. MULTIPLE DEVICES & EQUIPMENT SHALL BE LABELED SEQUENTIALLY.
6. IF DEVICE OR EQUIPMENT HAS NO SURFACE AREA FOR AFFIXING LABEL, LABEL SHALL BE AFFIXED TO DEVICE/EQUIPMENT MOUNTING TABS.

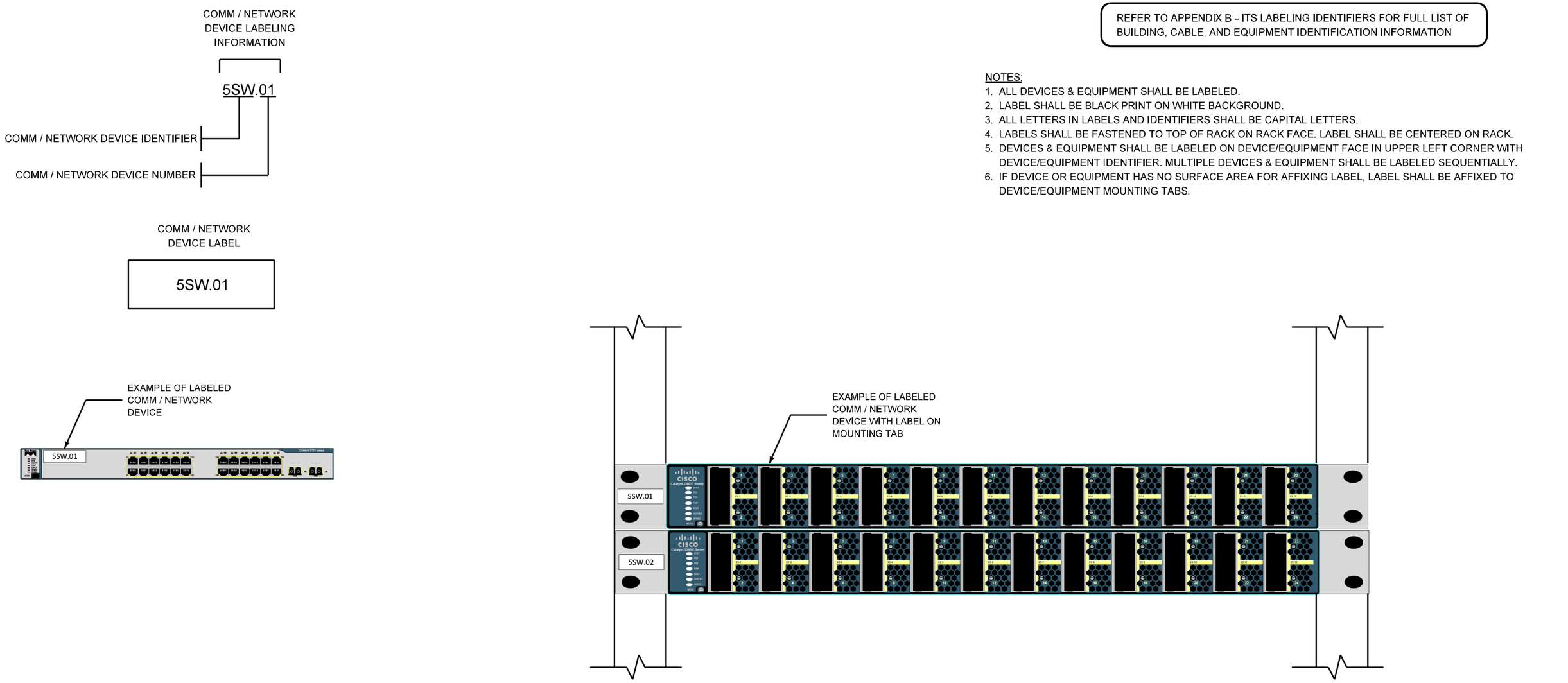

FIGURE A-2: COMM/NETWORK EQUIPMENT LABELING SCHEME

NOTES:

1. FIBER TERMINATION SHELF SHALL BE LABELED ON SHELF COVER IN UPPER LEFT CORNER WITH SHELF IDENTIFIER. MULTIPLE FIBER TERMINATION SHELVES IN RACK SHALL BE LABELED SEQUENTIALLY. ALL FIBER TERMINATION SHELVES SHALL BE LABELED.
2. FIBER TERMINATION SHELF SHALL BE LABELED ON SHELF COVER WITH CABLE LABELS OF ALL CABLES TERMINATED IN THE FIBER TERMINATION SHELF.
3. FIBER TERMINATION PANELS SHALL BE LABELED AT TOP OF PANEL WITH PANEL IDENTIFIER. PANELS SHALL BE LABELED STARTING AT A AND LABELING THROUGH END OF PANEL. SKIPPING LETTER I IF LABELING UP TO PANEL M.
4. FIBER TERMINATION PANEL PORTS SHALL BE LABELED WITH PORT IDENTIFIER.
5. ALL LETTERS IN LABELS AND IDENTIFIERS SHALL BE CAPITAL LETTERS.
6. FIBER TERMINATION SHELF, PANEL AND PORT LABELS, PRE-LABELED FROM THE MANUFACTURER MAY BE USED IN LIEU OF MANUAL LABELING, AS LONG AS MANUFCATURER LABELS ARE CLEARLY VISIBLE AND DISTINGUISHABLE BY MARKING. ETCHED MANUFACTURER LABELS, WITH NO COLOR DISTINCTION FROM THE SURFACE LABEL IS ETCHED INTO, SHALL BE LABELED OVER PER LABELING SPECIFICATIONS.

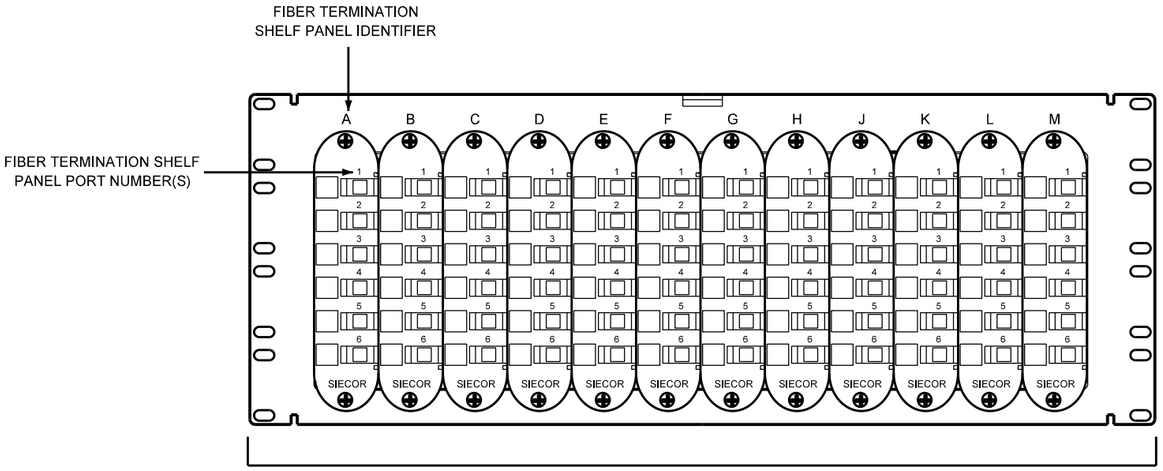

FIBER TERMINATION SHELF LABELING INFORMATION - INTERIOR VIEW

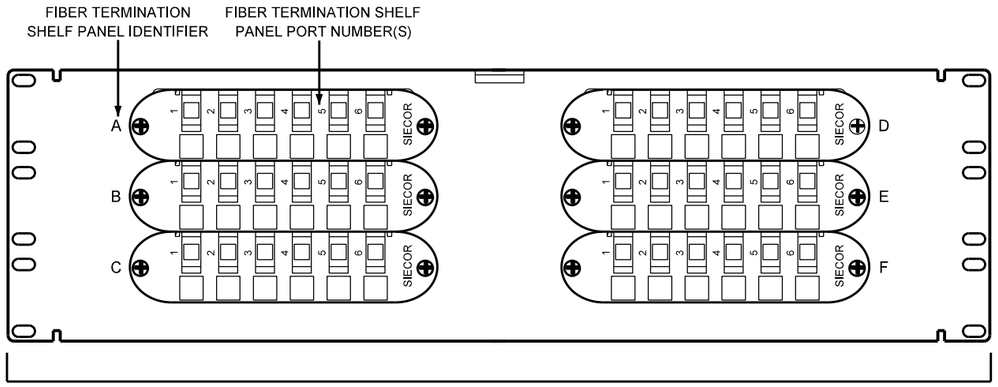

FIBER TERMINATION SHELF LABELING INFORMATION - INTERIOR VIEW

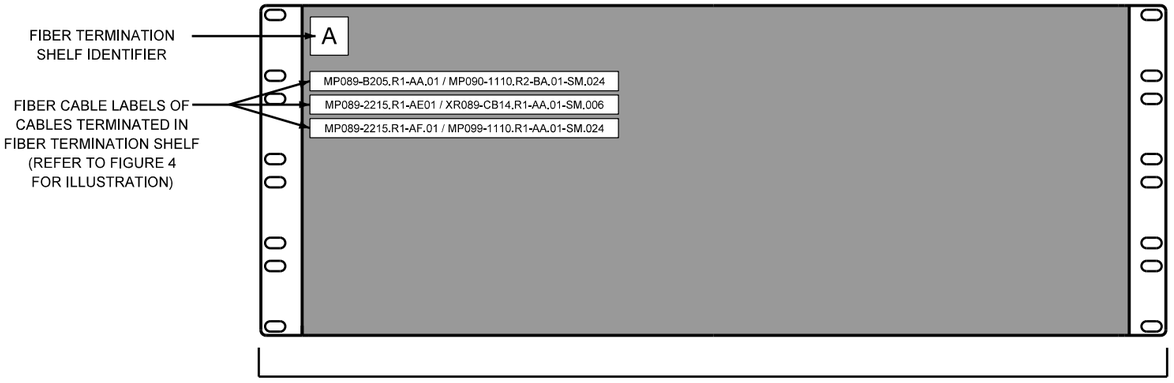

FIBER TERMINATION SHELF LABELING INFORMATION - COVER VIEW

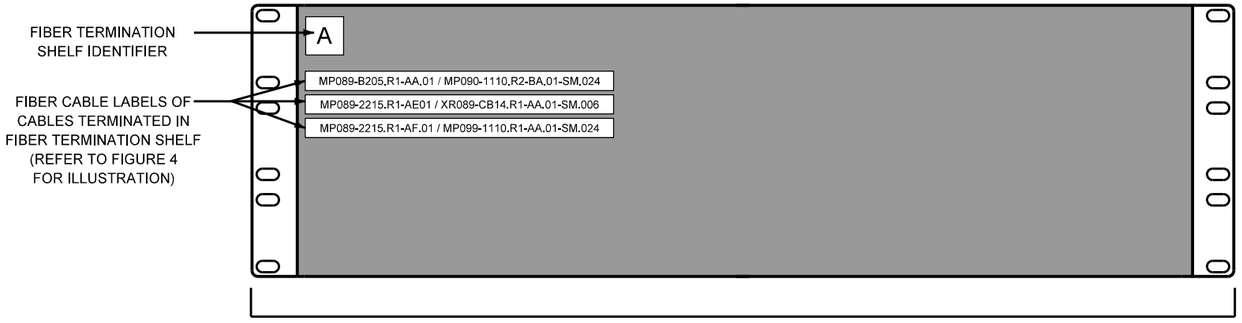

FIBER TERMINATION SHELF LABELING INFORMATION - COVER VIEW

FIGURE A-3: FIBER TERMINATION SHELF / PANEL LABELING SCHEME

Illinois Tollway

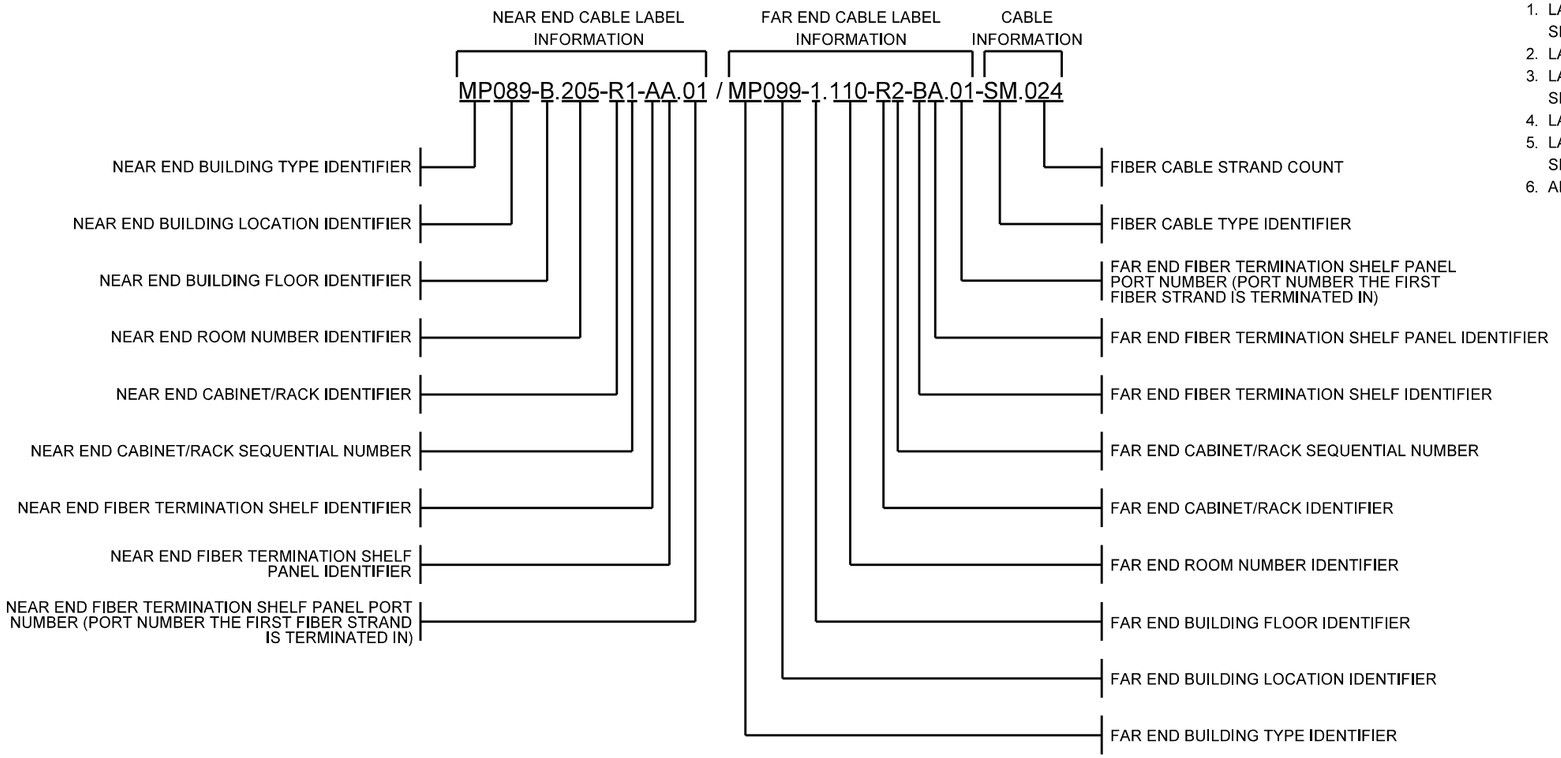

NOTES:

1. LABEL SHALL BE PLACED NO CLOSER THAN 12" FROM POINT OF ENTRY INTO FIBER TERMINATION SHELF OR SPLICE CASE.
2. LABEL SHALL BE VISIBLE/VIEWABLE FROM POINT OF FINAL RESTING ORIENTATION.
3. LABEL SHALL BE MECHANICALLY IMPRINTED, SMEAR RESISTANT, FADE RESISTANT, WRAP AROUND, SELF-LAMINATING TYPE.
4. LABEL SHALL BE BLACK PRINT ON WHITE BACKGROUND.
5. LABEL SHALL BE TWO LINES OF TEXT. FIRST LINE SHALL HAVE NEAR END BUILDING INFORMATION. SECOND LINE SHALL HAVE FAR END BUILDING INFORMATION FOLLOWED BY CABLE TYPE AND STRAND COUNT.
6. ALL LETTERS IN LABELS AND IDENTIFIERS SHALL BE CAPITAL LETTERS.

NEAR END CABLE LABEL

MP089-B.205-R1-AA.01 /
MP099-1.110-R2-BA.01-SM.024

FAR END CABLE LABEL

MP099-1.110-R2-BA.01 /
MP089-B.205-R1-AA.01-SM.024

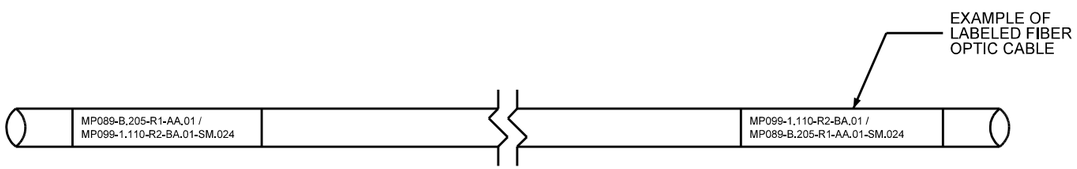

Illinois Tollway

FIGURE A-4: FIBER OPTIC BACKBONE & DROP CABLE LABELING SCHEME - BUILDING TO BUILDING

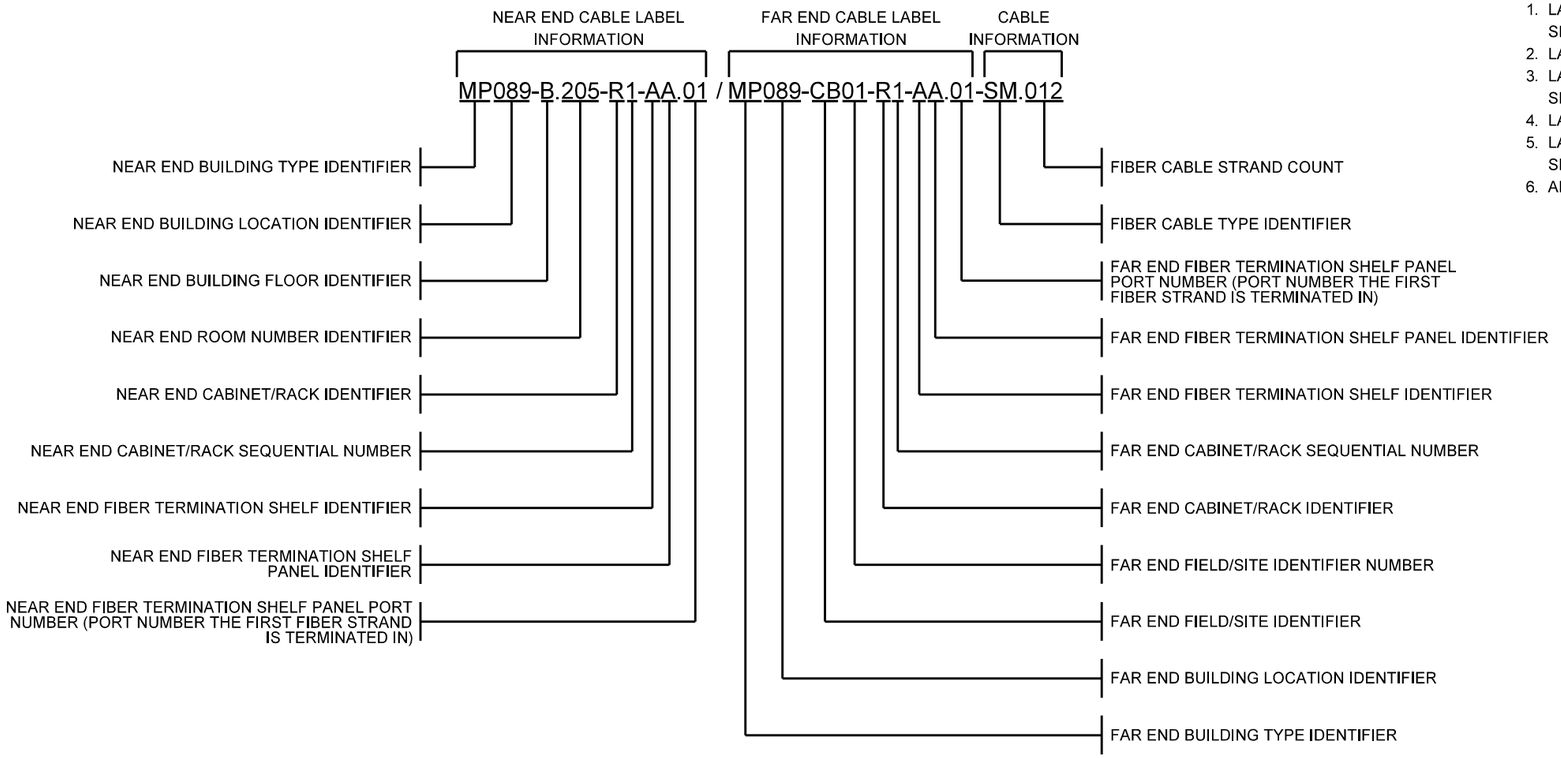

NOTES:

1. LABEL SHALL BE PLACED NO CLOSER THAN 12" FROM POINT OF ENTRY INTO FIBER TERMINATION SHELF OR SPLICE CASE.
2. LABEL SHALL BE VISIBLE/VIEWABLE FROM POINT OF FINAL RESTING ORIENTATION.
3. LABEL SHALL BE MECHANICALLY IMPRINTED, SMEAR RESISTANT, FADE RESISTANT, WRAP AROUND, SELF-LAMINATING TYPE.
4. LABEL SHALL BE BLACK PRINT ON WHITE BACKGROUND.
5. LABEL SHALL BE TWO LINES OF TEXT. FIRST LINE SHALL HAVE NEAR END BUILDING INFORMATION. SECOND LINE SHALL HAVE FAR END BUILDING INFORMATION FOLLOWED BY CABLE TYPE AND STRAND COUNT.
6. ALL LETTERS IN LABELS AND IDENTIFIERS SHALL BE CAPITAL LETTERS.

NEAR END CABLE LABEL

MP089-B.205-R1-AA.01 /
MP089-CB01-R1-AA.01-SM.012

FAR END CABLE LABEL

MP089-CB01-R1-AA.01 /
MP089-B.205-R1-AA.01-SM.012

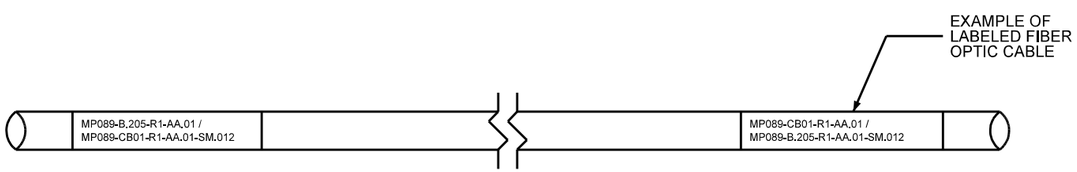

Illinois Tollway

FIGURE A-5: FIBER CABLE BACKBONE/DROP CABLE LABELING SCHEME (BUILDING TO FIELD SITE)

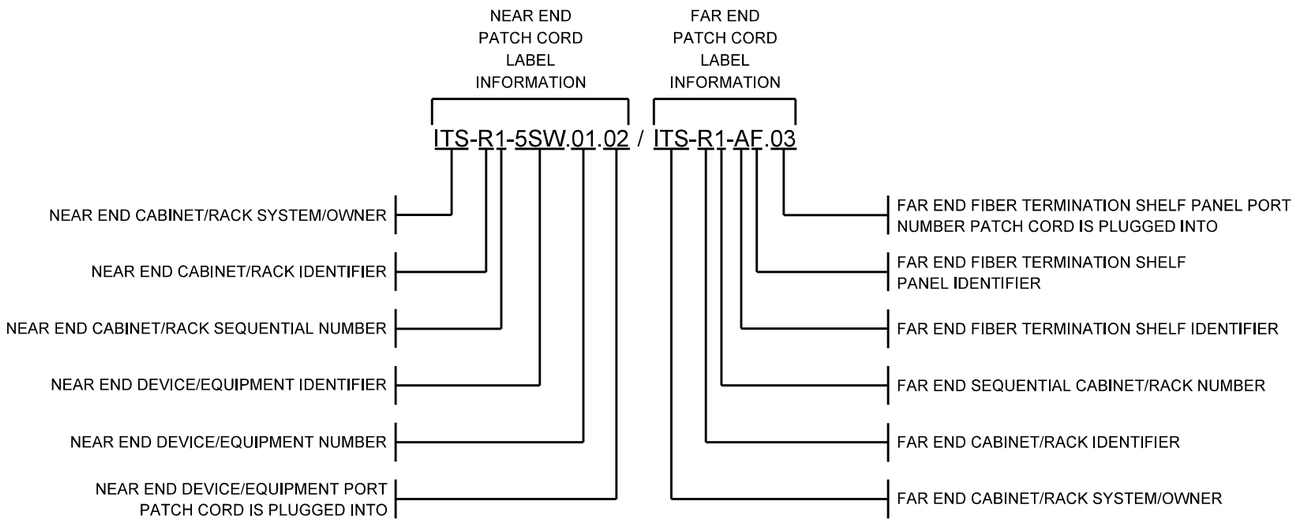

NOTES:

1. LABEL SHALL BE PLACED NO CLOSER THAN 6" FROM CONNECTION POINT.
2. LABEL SHALL BE VISIBLE/VIEWABLE FROM POINT OF FINAL RESTING ORIENTATION.
3. LABEL SHALL BE MECHANICALLY IMPRINTED, SMEAR RESISTANT, FADE RESISTANT, WRAP AROUND, SELF-LAMINATING TYPE.
4. LABEL SHALL BE BLACK PRINT ON WHITE BACKGROUND.
5. ALL LETTERS IN LABELS AND IDENTIFIERS SHALL BE CAPITAL LETTERS.

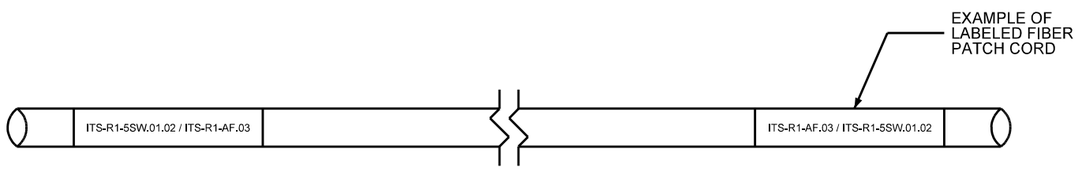

FIGURE A-6: FIBER CABLE PATCH CORD LABELING SCHEME (EQUIP TO FIBER SHELF)

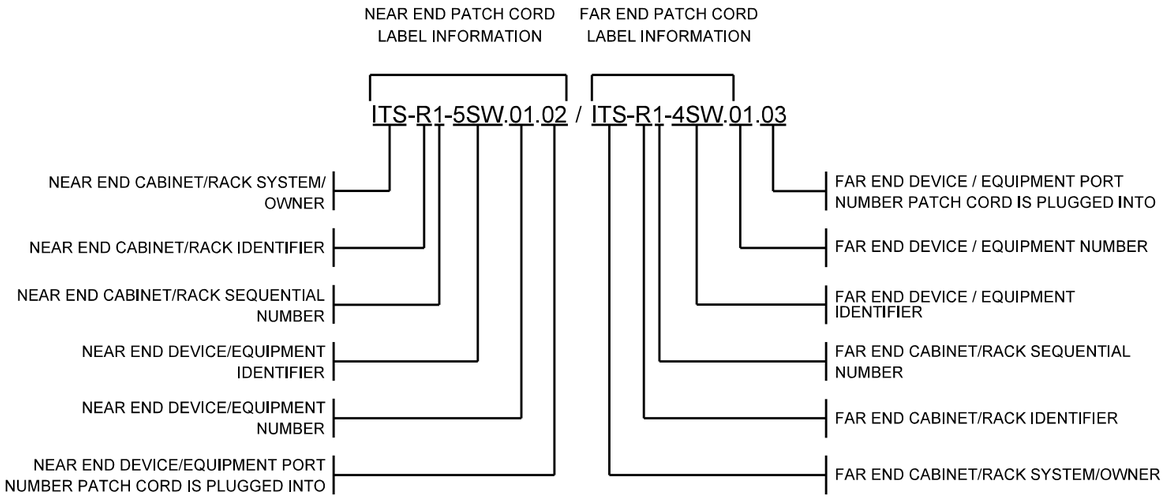

NOTES:

1. LABEL SHALL BE PLACED NO CLOSER THAN 6" FROM CONNECTION POINT.
2. LABEL SHALL BE VISIBLE / VIEWABLE FROM POINT OF FINAL RESTING ORIENTATION.
3. LABEL SHALL BE MECHANICALLY IMPRINTED, SMEAR RESISTANT, FADE RESISITANT, WRAP AROUND, SELF-LAMINATING TYPE.
4. LABEL SHALL BE BLACK PRINT ON WHITE BACKGROUND.
5. ALL LETTERS IN LABELS AND IDENTIFIERS SHALL BE IN CAPITAL LETTERS.

NEAR END PATCH CORD LABEL

ITS-R1-5SW.01.02 / ITS-R1-4SW.01.03

FAR END PATCH CORD LABEL

ITS-R1-4SW.01.03 / ITS-R1-5SW.01.04

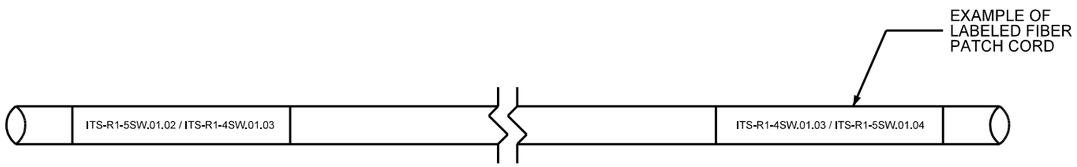

Illinois Tollway

FIGURE A-7: FIBER CABLE PATCH CORD LABELING SCHEME (EQUIP TO EQUIP)

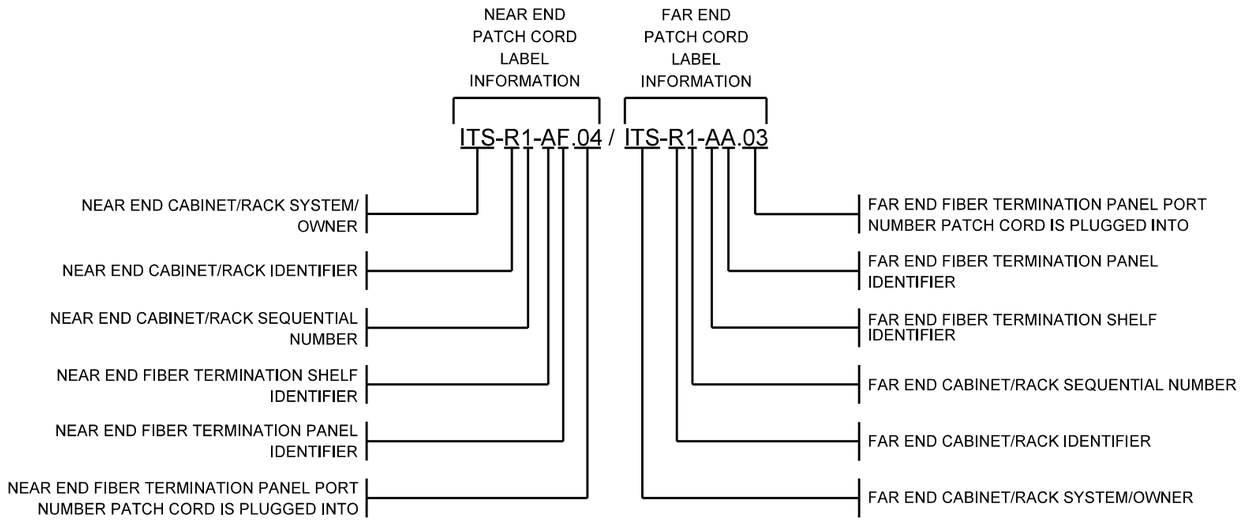

NOTES:

1. LABEL SHALL BE PLACED NO CLOSER THAN 6" FROM CONNECTION POINT.
2. LABEL SHALL BE VISIBLE / VIEWABLE FROM POINT OF FINAL RESTING ORIENTATION.
3. LABEL SHALL BE MECHANICALLY IMPRINTED, SMEAR RESISTANT, FADE RESISITANT, WRAP AROUND, SELF-LAMINATING TYPE.
4. LABEL SHALL BE BLACK PRINT ON WHITE BACKGROUND.
5. ALL LETTERS IN LABELS AND IDENTIFIERS SHALL BE IN CAPITAL LETTERS.

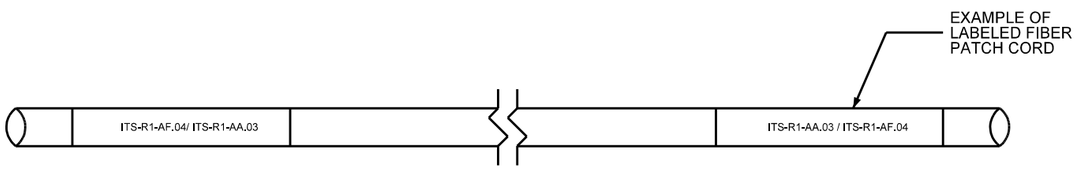

FIGURE A-8: FIBER CABLE PATCH CORD LABELING SCHEME (FIBER SHELF TO FIBER SHELF)

NOTES:

1. ALL GROUNDING BUSBARS SHALL BE LABELED.
2. LABELS SHALL BE PHENOLIC TAG TYPE.
3. LABEL SHALL BE BLACK PRINT ON YELLOW BACKGROUND.
4. ALL LETTERS IN LABELS AND IDENTIFIERS SHALL BE CAPITAL LETTERS.
5. LABELS SHALL BE FASTENED TO SIDE OF TMGB OR TGB, SO AS TO KEEP LABEL FROM BEING COVERED UP BY BONDING CONDUCTOR AND CONNECTIONS.
6. LABEL SHALL BE LEVEL WITH TOP OF TMGB OR TGB.
7. PHENOLIC TAG SHALL BE NO LESS THAN 2 INCHES TALL AND LABEL LETTERS/NUMBERS SHALL BE NO LESS THAN 1.5 INCHES TALL.

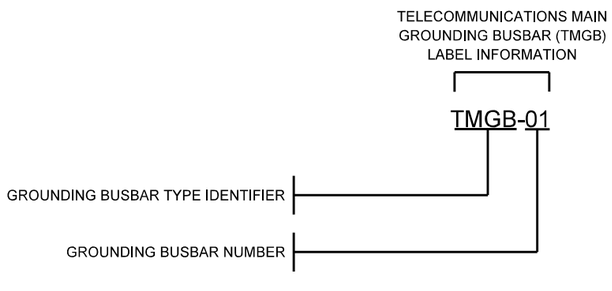

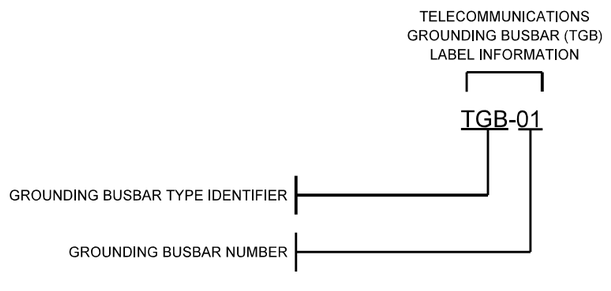

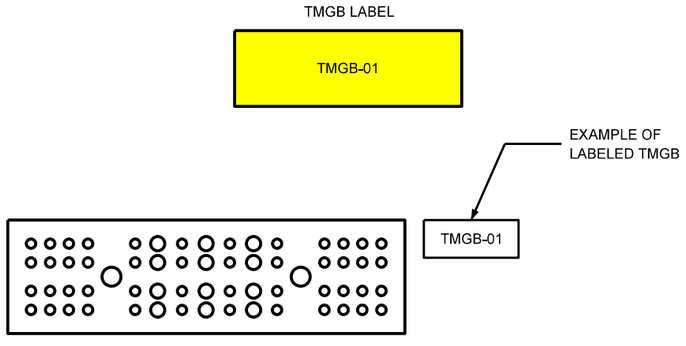

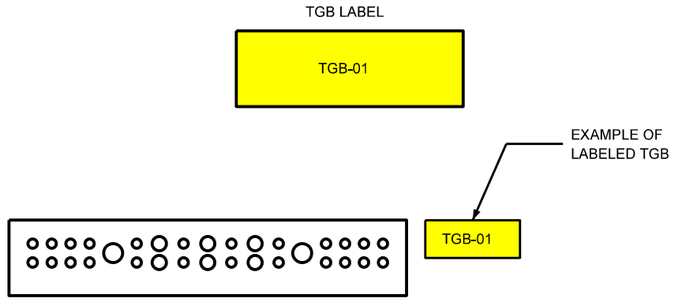

FIGURE A-9: GROUND BUSBAR LABELING SCHEME

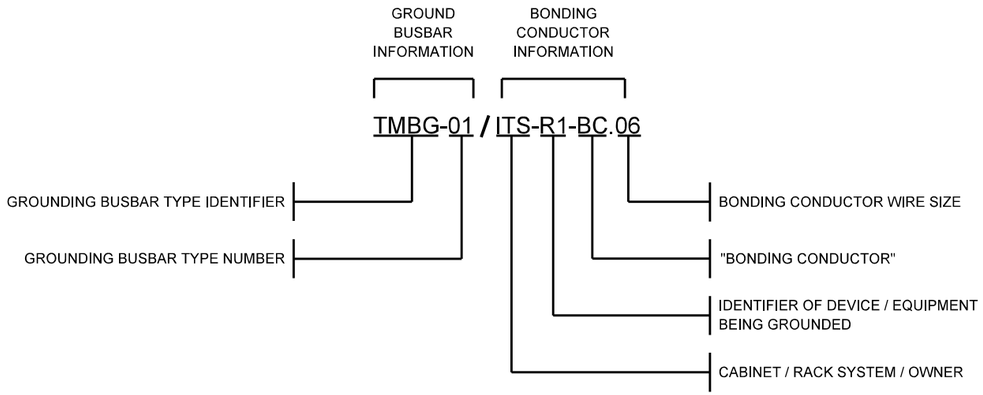

NOTES:

A. BONDING CONDUCTOR LABELS
   1. ALL BONDING CONDUCTORS SHALL BE LABELED.
   2. LABEL SHALL BE PLACED NO CLOSER THAN 6" FROM POINT OF BONDING CONNECTION TO GROUNDING BUSBAR.
   3. LABEL SHALL BE VISIBLE / VIEWABLE FROM POINT OF FINAL RESTING ORIENTATION.
   4. LABEL SHALL BE MECHANICALLY IMPRINTED, SMEAR RESISTANT, FADE RESISTANT, WRAP AROUND, SELF LAMINATING TYPE.
   5. LABEL SHALL BE BLACK PRINT ON GREEN BACKGROUND.
   6. ALL LETTERS IN LABELS AND IDENTIFIERS SHALL BE CAPITAL LETTERS.

B. WARNING LABELS
   1. ALL BONDING CONDUCTORS SHALL HAVE WARNING LABELS.
   2. LABELS SHALL BE PLACED NEAR BONDING CONDUCTOR CABLE LABEL.
   3. LABELS SHALL BE THERMAL MARKER TRANSFER PLATE TYPE.
   4. WARNING LABELS SHALL BE BLACK PRINT ON RED BACKGROUND.
   5. ALL LETTERS ON WARNING LABELS SHALL BE CAPITAL LETTERS.

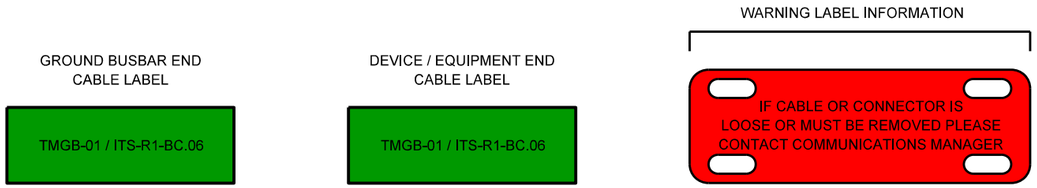

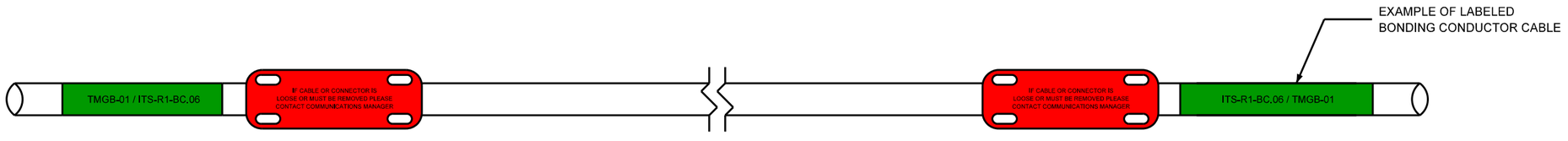

FIGURE A-10: BONDING CONDUCTOR LABELING SCHEME

TERMINAL PANEL BOARD (TPB)
LABEL INFORMATION

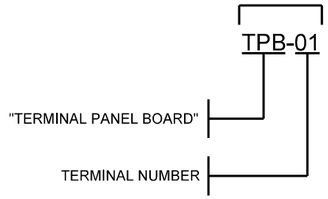

TERMINAL PANEL BOARD LABEL

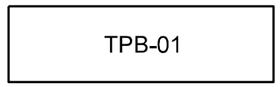

NOTES:

1. ALL TERMINAL PANEL BOARDS SHALL BE LABELED.
2. LABEL SHALL BE PHENOLIC TAG TYPE.
3. LABEL SHALL BE BLACK PRINT ON WHITE BACKGROUND.
4. ALL LETTERS IN LABELS AND IDENTIFIERS SHALL BE IN CAPITAL LETTERS.
5. LABELS SHALL BE FASTENED TO SIDE OF TERMINAL STRIP ON BOARD FACE, SO AS TO KEEP LABEL FROM BEING COVERED UP BY CONDUCTORS AND CONNECTIONS. LABEL SHALL BE LEVEL WITH TOP OF TERMINAL STRIP.
6. PHENOLIC TAG SHALL BE NO LESS THAN 1.5 INCHES TALL AND LABEL LETTERS/NUMBERS SHALL BE NO LESS THAN 1 INCHES TALL. TAG SHALL HAVE 1/4 INCH SPACE AT TOP AND BOTTOM OF PHENOLIC TAG AND LABEL LETTERS/NUMBERS SHALL BE AS TALL AS REMAINING SPACE ALLOWS.

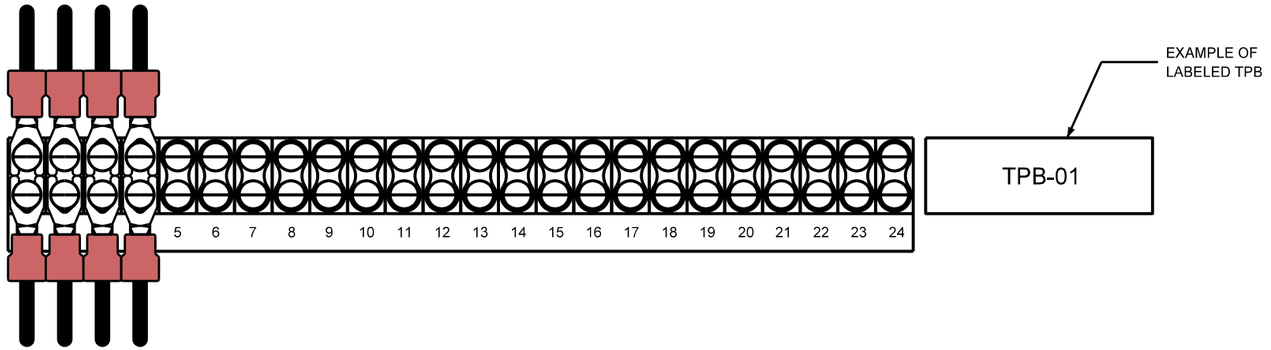

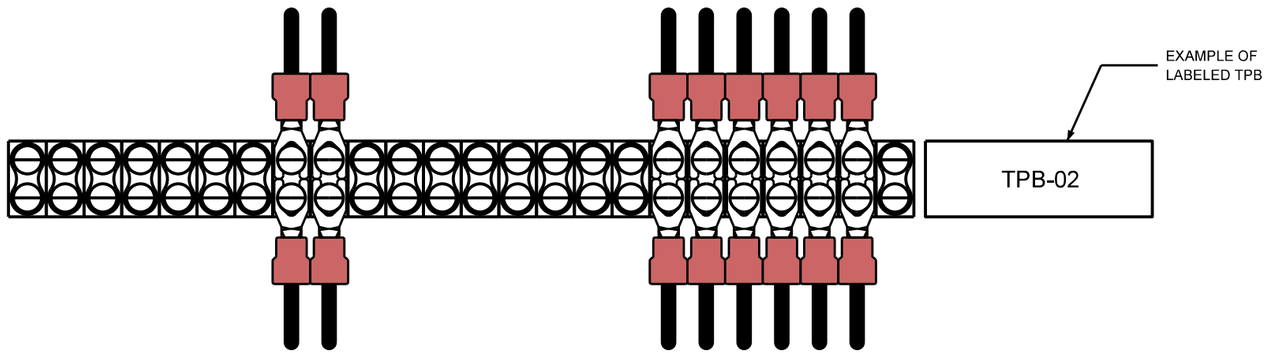

FIGURE A-11: TERMINAL PANEL BOARD LABELING SCHEME

CABINET LABELING INFORMATION

088W-123.67-CAB001

- BUILDING/ROADWAY IDENTIFIER
- DIRECTION OF TRAVEL
- MILE MARKER (NEAREST .01 MILE)
- CABINET NUMBER
- "CABINET"

HANDHOLE IDENTIFICATION INFORMATION

088W-123.67-HHX001

- BUILDING/ROADWAY IDENTIFIER
- DIRECTION OF TRAVEL
- MILE MARKER (NEAREST .01 MILE)
- HANDHOLE NUMBER
- "HANDHOLE", WHERE X = C FOR "COMMUNICATIONS" OR E FOR "ELECTRICAL"

CABINET LABEL

088W-123.67-CAB001

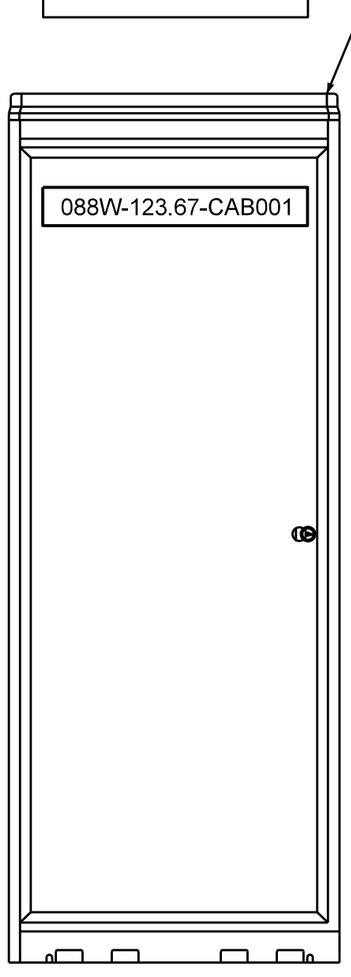

REFER TO APPENDIX B - ITS LABELING IDENTIFIERS FOR FULL LIST OF BUILDING, CABLE, AND EQUIPMENT IDENTIFICATION INFORMATION

NOTES:

A. GENERAL
   1. ALL FIELD/SITE ENCLOSURES (APART FROM HANDHOLES) SHALL BE LABELED.
   2. LABEL SHALL BE PHENOLIC TAG TYPE.
   3. LABEL SHALL BE BLACK PRINT ON WHITE BACKGROUND.
   4. ALL LETTERS IN LABELS AND IDENTIFIERS SHALL BE IN CAPITAL LETTERS.
   5. ALL CABLES INSIDE HANDHOLES/MAINTENANCE HOLES SHALL BE LABELED WITHIN 12 INCHES OF ALL ENTRY/EXIT POINTS.

B. CABINETS
   1. LABELS SHALL BE FASTENED TO TOP OF CABINET DOOR ON DOOR FACE. LABEL SHALL BE CENTERED ON CABINET DOOR.
   2. PHENOLIC TAG SHALL BE NO LESS THAN 2 INCHES TALL AND LABEL LETTERS/NUMBERS SHALL BE NO LESS THAN 1.5 INCHES TALL.

C. HANDHOLES
   1. HANDHOLES SHALL NOT BE PHYSICALLY LABELED; RATHER HANDHOLE IDENTIFICATION INFORMATION IS PROVIDED FOR DOCUMENTATION PURPOSES ONLY.

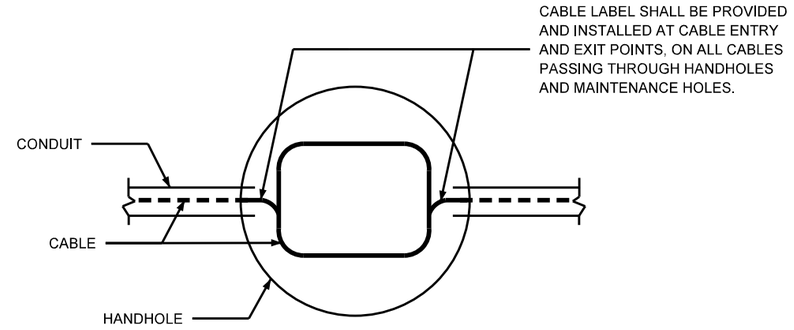

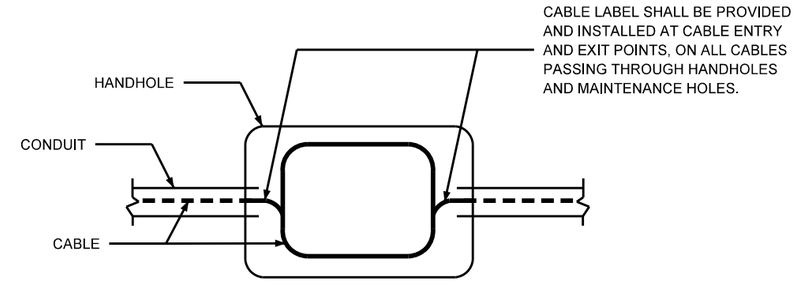

Illinois Tollway

FIGURE A-12: FIELD / SITE SPACE LABELING SCHEME

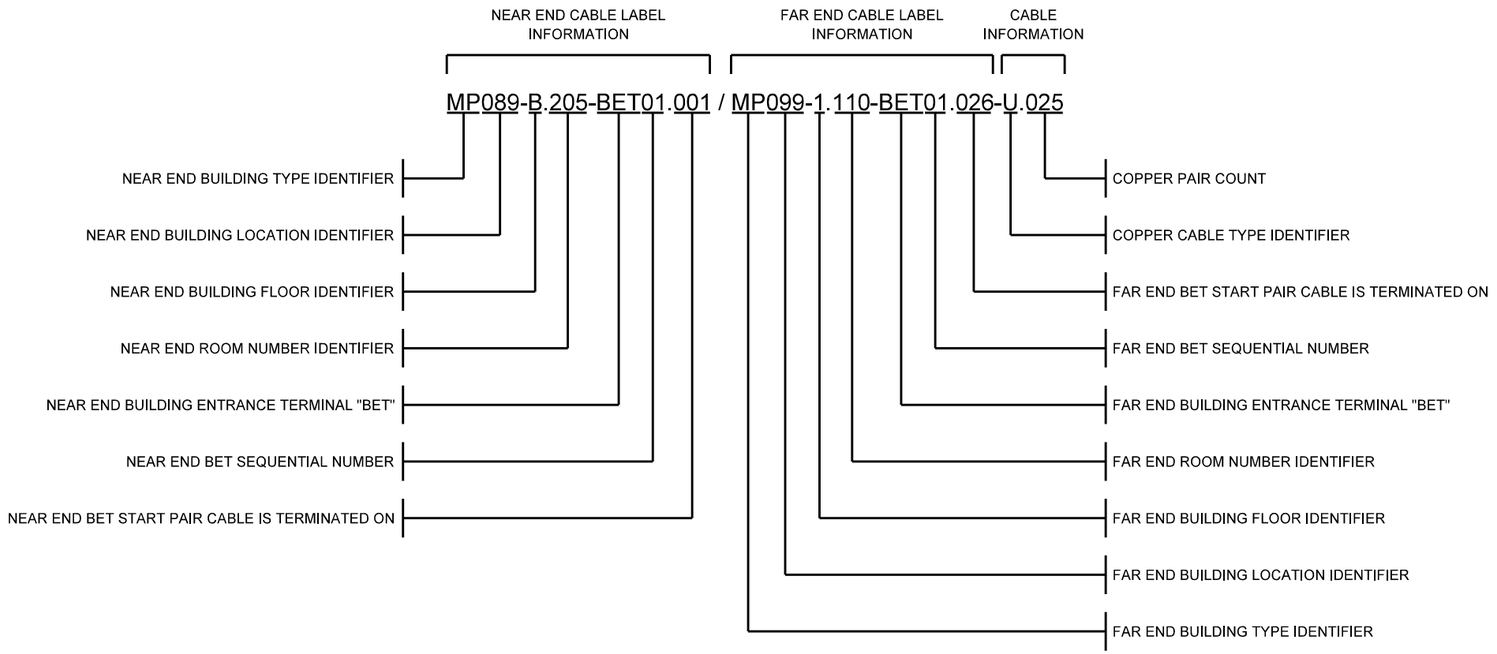

NOTES:

1. LABELS SHALL BE PLACED NO CLOSER THAN 12" FROM POINT OF ENTRY INTO COPPER PATCH PANEL OR SPLICE CASE.
2. LABEL SHALL BE VISIBLE / VIEWABLE FROM POINT OF FINAL RESTING ORIENTATION.
3. LABEL SHALL BE MECHANICALLY IMPRINTED, SMEAR RESISTANT, FADE RESISTANT, WRAP AROUND, SELF-LAMINATING TYPE.
4. LABEL SHALL BE BLACK PRINT ON WHITE BACKGROUND.
5. LABEL SHALL BE TWO LINES OF TEXT. FIRST LINE SHALL HAVE NEAR END BUILDING INFORMATION. SECOND LINE SHALL HAVE FAR END BUILDING INFORMATION FOLLOWED BY CABLE TYPE AND PAIR COUNT.
6. ALL LETTERS IN LABELS AND IDENTIFIERS SHALL BE CAPITAL LETTERS.

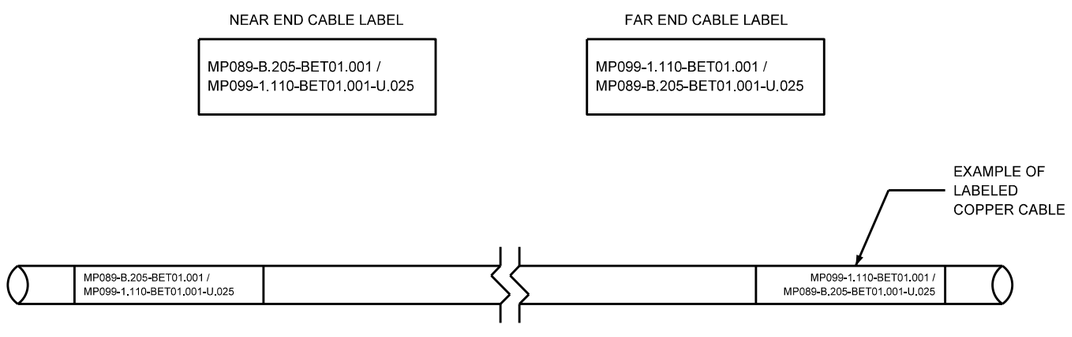

Illinois Tollway

FIGURE A-13: COPPER BACKBONE/DROP CABLE LABELING SCHEME (BUILDING TO BUILDING)

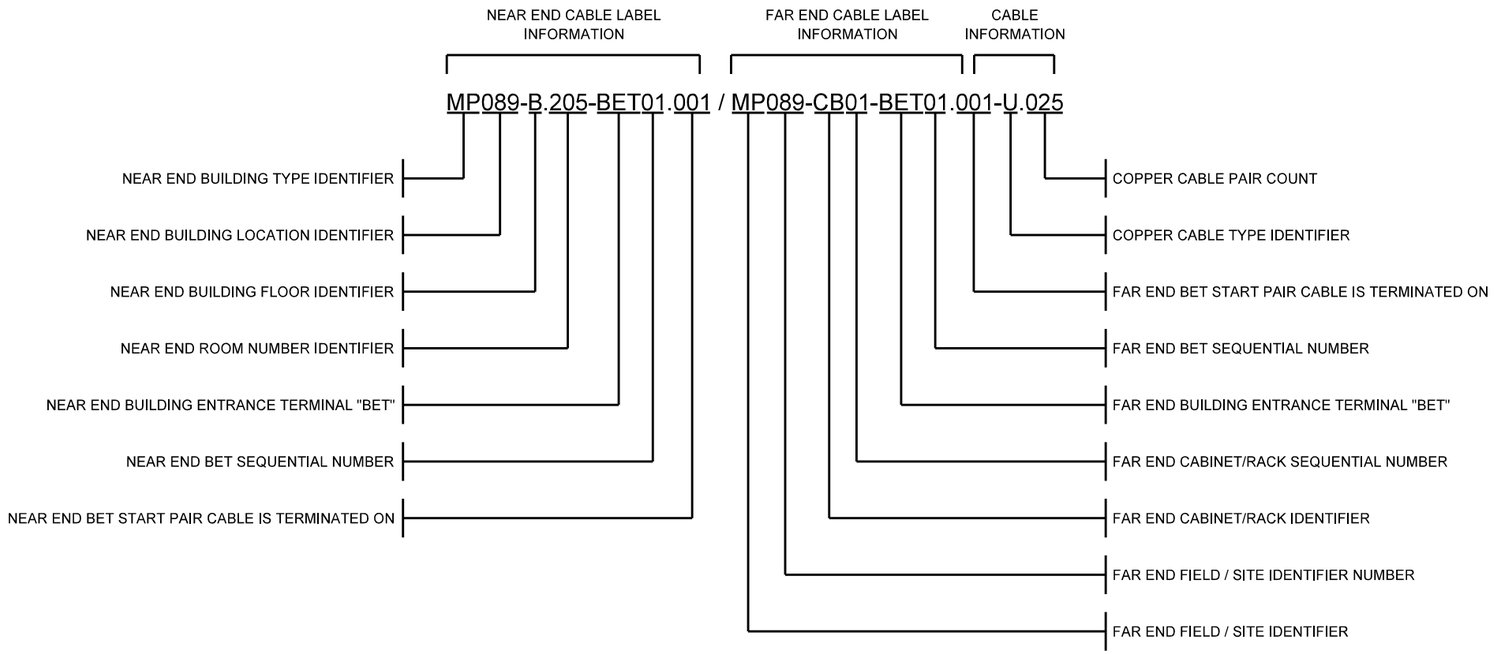

NOTES:

1. LABELS SHALL BE PLACED NO CLOSER THAN 12" FROM POINT OF ENTRY INTO COPPER PATCH PANEL OR SPLICE CASE.
2. LABEL SHALL BE VISIBLE / VIEWABLE FROM POINT OF FINAL RESTING ORIENTATION.
3. LABEL SHALL BE MECHANICALLY IMPRINTED, SMEAR RESISTANT, FADE RESISTANT, WRAP AROUND, SELF-LAMINATING TYPE.
4. LABEL SHALL BE BLACK PRINT ON WHITE BACKGROUND.
5. LABEL SHALL BE TWO LINES OF TEXT. FIRST LINE SHALL HAVE NEAR END BUILDING INFORMATION. SECOND LINE SHALL HAVE FAR END BUILDING INFORMATION FOLLOWED BY CABLE TYPE AND PAIR COUNT.
6. ALL LETTERS IN LABELS AND IDENTIFIERS SHALL BE CAPITAL LETTERS.

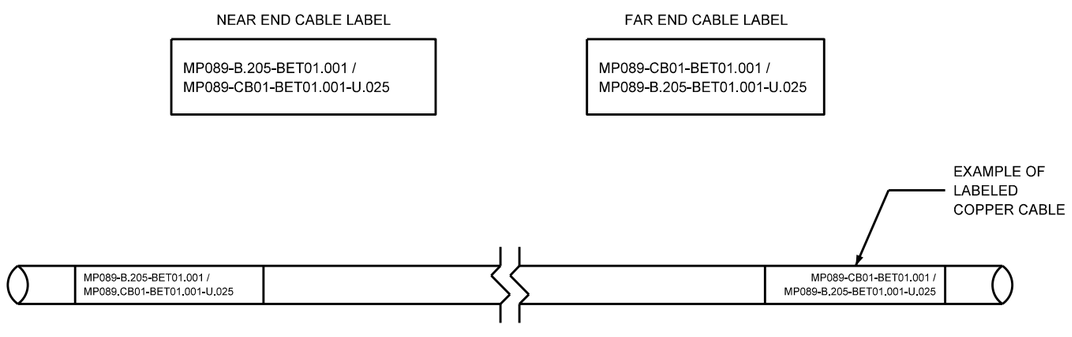

Illinois Tollway

FIGURE A-14: COPPER BACKBONE/DROP CABLE LABELING SCHEME (BUILDING TO FIELD SITE)

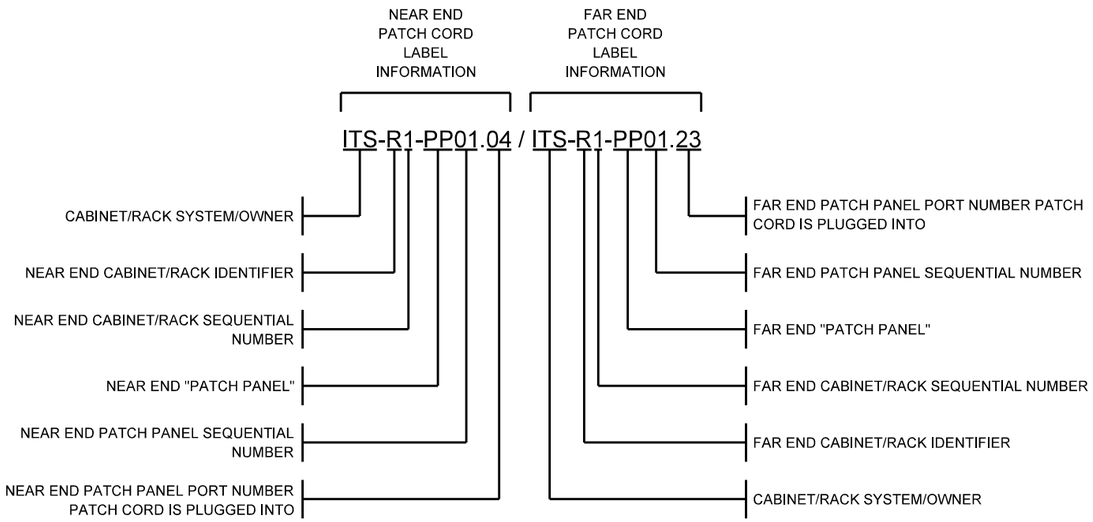

NEAR END PATCH CORD LABEL

ITS-R1-PP01.04 / ITS-R1-PP01.23

FAR END PATCH CORD LABEL

ITS-R1-PP01.23 / ITS-R1-PP01.04

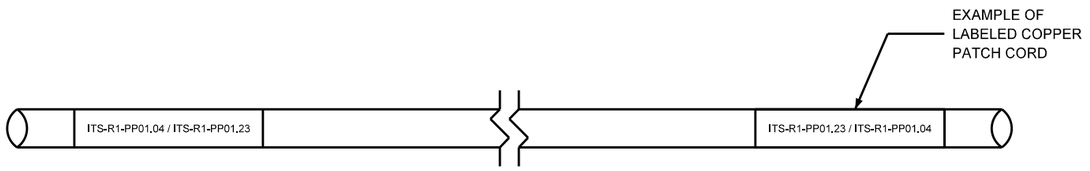

NOTES:

1. LABEL SHALL BE PLACED NO CLOSER THAN 6" FROM CONNECTION POINT.
2. LABEL SHALL BE VISIBLE / VIEWABLE FROM POINT OF FINAL RESTING ORIENTATION.
3. LABEL SHALL BE MECHANICALLY IMPRINTED, SMEAR RESISTANT, FADE RESISITANT, WRAP AROUND, SELF-LAMINATING TYPE.
4. LABEL SHALL BE BLACK PRINT ON WHITE BACKGROUND.
5. ALL LETTERS IN LABELS AND IDENTIFIERS SHALL BE CAPITAL LETTERS.

Illinois Tollway

FIGURE A-15: COPPER PATCH CORD LABELING SCHEME (PATCH PANEL TO PATCH PANEL)

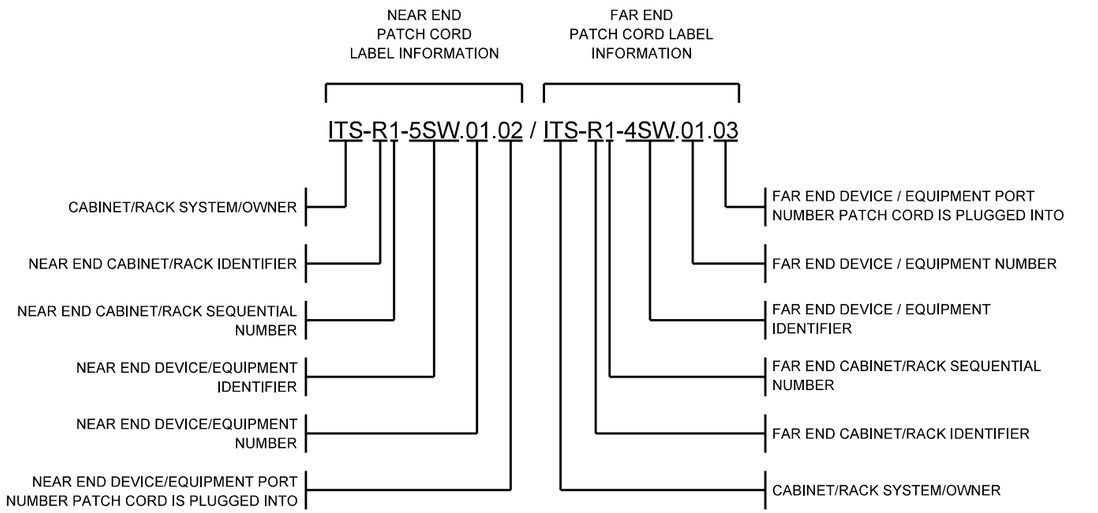

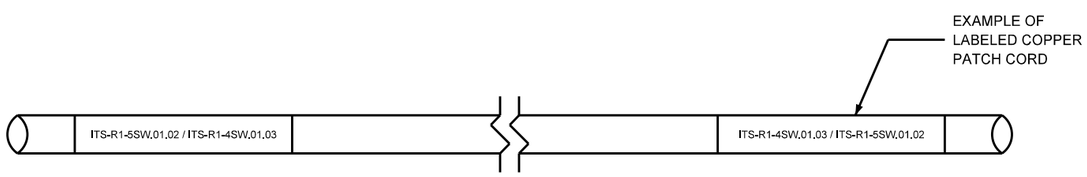

NOTES:
1. LABEL SHALL BE PLACED NO CLOSER THAN 6" FROM CONNECTION POINT.
2. LABEL SHALL BE VISIBLE / VIEWABLE FROM POINT OF FINAL RESTING ORIENTATION.
3. LABEL SHALL BE MECHANICALLY IMPRINTED, SMEAR RESISTANT, FADE RESISITANT, WRAP AROUND, SELF-LAMINATING TYPE.
4. LABEL SHALL BE BLACK PRINT ON WHITE BACKGROUND.
5. ALL LETTERS IN LABELS AND IDENTIFIERS SHALL BE CAPITAL LETTERS.

Illinois Tollway

FIGURE A-16: COPPER PATCH CORD LABELING SCHEME (DEVICE/EQUIP TO DEVICE/EQUIP)

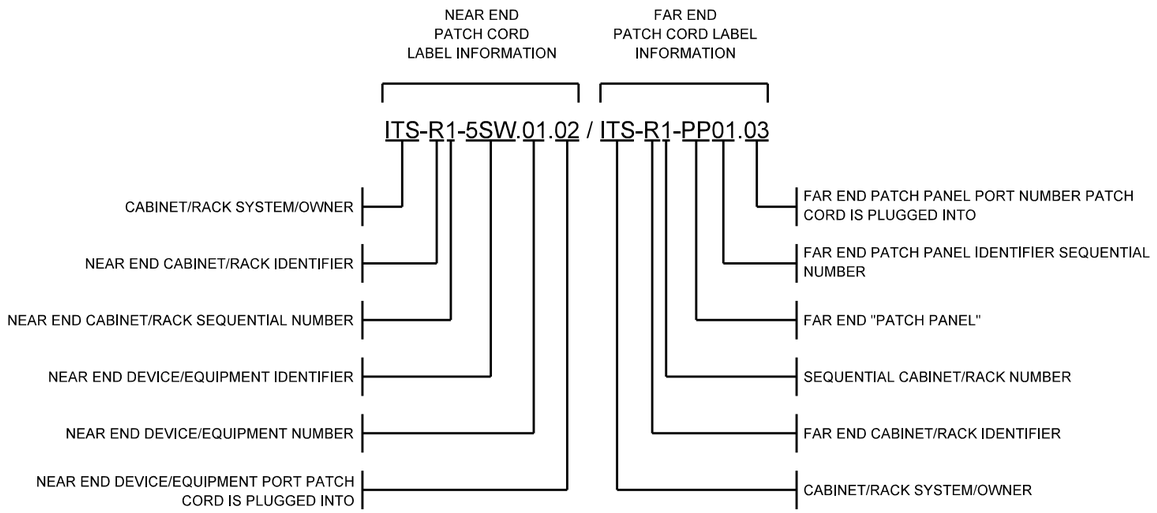

NEAR END PATCH CORD LABEL

ITS-R1-5SW.01.02 / ITS-R1-PP01.03

FAR END PATCH CORD LABEL

ITS-R1-PP01.03 / ITS-R1-5SW.01.02

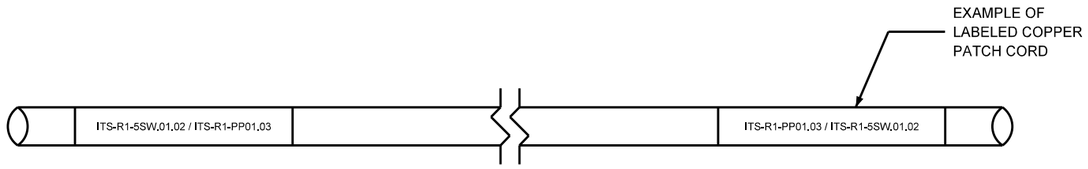

NOTES:

1. LABEL SHALL BE PLACED NO CLOSER THAN 6" FROM CONNECTION POINT.
2. LABEL SHALL BE VISIBLE / VIEWABLE FROM POINT OF FINAL RESTING ORIENTATION.
3. LABEL SHALL BE MECHANICALLY IMPRINTED, SMEAR RESISTANT, FADE RESISITANT, WRAP AROUND, SELF-LAMINATING TYPE.
4. LABEL SHALL BE BLACK PRINT ON WHITE BACKGROUND.
5. ALL LETTERS IN LABELS AND IDENTIFIERS SHALL BE CAPITAL LETTERS.

Illinois Tollway

FIGURE A-17: COPPER PATCH CORD LABELING SCHEME (DEVICE/EQUIP TO PATCH PANEL)

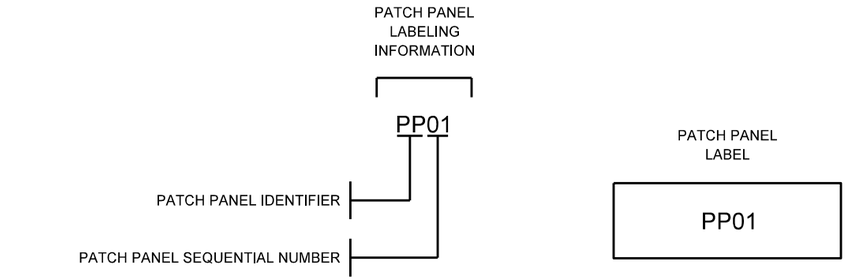

NOTES:

1. COPPER PATCH PANEL SHALL BE LABELED ON PATCH PANEL COVER ON LEFT SIDE WITH PATCH PANEL IDENTIFIER. LABEL SHALL BE CENTERED ON PATCH PANEL VERTICALLY. MULTIPLE PATCH PANELS IN CABINET/RACK SHALL BE LABELED SEQUENTIALLY. ALL PATCH PANELS SHALL BE LABELED.
2. PATCH PANEL PORTS SHALL BE LABELED WITH PORT IDENTIFIER.
3. ALL LETTERS IN LABELS AND IDENTIFIERS SHALL BE CAPITAL LETTERS.
4. PATCH PANEL AND PORT LABELS, PRE-LABELED FROM THE MANUFACTURER MAY BE USED IN LIEU OF MANUAL LABELING, AS LONG AS MANUFACTURER LABELS ARE CLEARLY VISIBLE AND DISTINGUISHIBLE BY MARKING. ETCHED MANUFACTURER LABELS, WITH NO COLOR DISTINCTION FROM THE SURFACE LABEL IS ETCHED INTO, SHALL BE LABELED OVER PER LABELING SPECIFICATIONS.

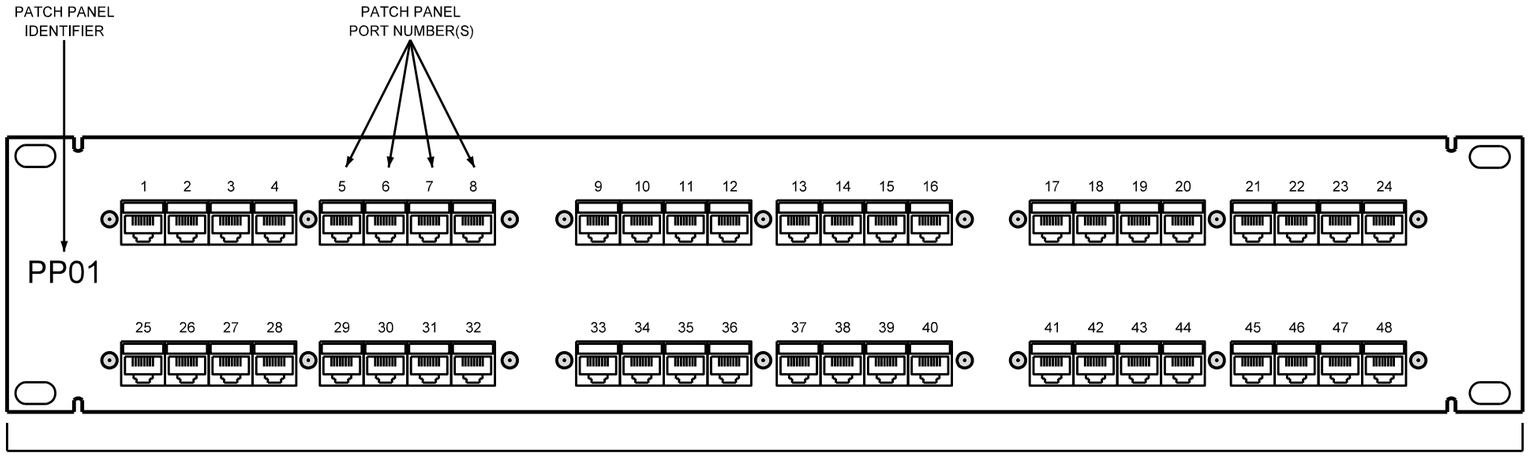

48-PORT PATCH PANEL LABELING INFORMATION - FRONT VIEW

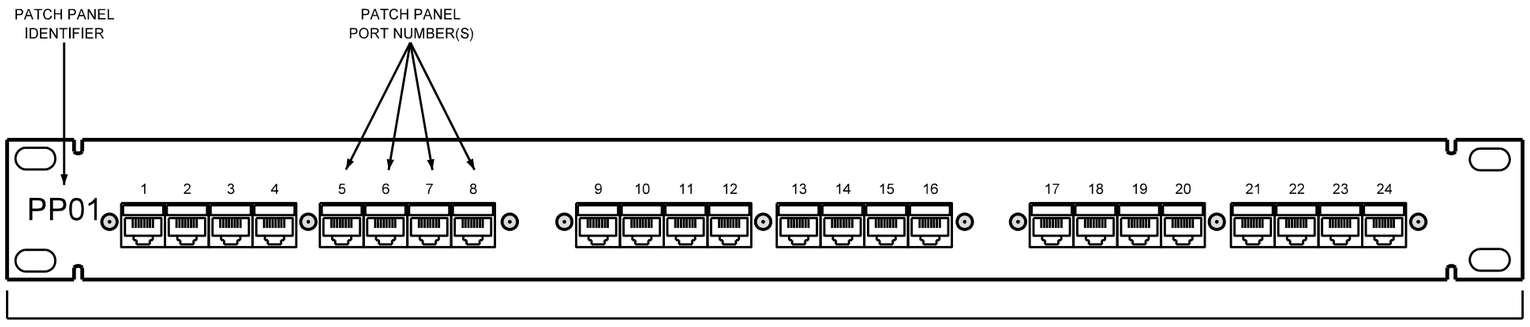

24-PORT PATCH PANEL LABELING INFORMATION - FRONT VIEW

FIGURE A-18: COPPER PATCH PANEL LABELING SCHEME

BUILDING ENTRANCE TERMINAL LABELING INFORMATION

BET01

BUILDING ENTRANCE TERMINAL "BET" IDENTIFIER

BET SEQUENTIAL NUMBER

BUILDING ENTRANCE TERMINAL LABEL

BET01

NOTES:

1. BUILDING ENTRANCE TERMINAL "BET" SHALL BE LABELED ON BET COVER WITH BET IDENTIFIER. LABEL SHALL BE PHENOLIC TAG TYPE. PHENOLIC TAG SHALL BE NO LESS THAN 2 INCHES TALL AND LABEL LETTERS/NUMBERS SHALL BE NO LESS THAN 1.5 INHES TALL. LABEL SHALL BE BLACK PRINT ON WHITE BACKGROUND. LABEL SHALL BE FASTENED TO BET COVER AND CENTERED NEAR TOP OF BET. MULTIPLE BET'S SHALL BE LABELED SEQUENTIALLY. ALL BET'S SHALL BE LABELED.
2. BET'S SHALL BE LABELED ON BET COVER WITH CABLE LABELS OF ALL CABLES TERMINATED IN THE BET. LABELS SHALL BE PHENOLIC TAG TYPE. PHENOLIC TAG SHALL BE NO LESS THAN 1 INCH TALL AND LABEL LETTERS/NUMBERS SHALL BE NO LESS THAN 1/2" TALL. LABELS SHALL BE BLACK PRINT ON WHITE BACKGROUND. LABELS SHALL BE FASTENED TO BET COVER ON LEFT SIDE OF BET. ALL CABLES TERMINATED IN BET'S SHALL BE LABELED.
3. ALL LETTERS IN LABELS AND IDENTIFIERS SHALL BE CAPITAL LETTERS.
4. INSIDE OF BET SHALL BE LABELED WITH LABEL STRIP. LABEL STRIP SHALL INDICATE FIRST TERMINATION PAIR AND EVERY FIFTH TERMINATION PAIR. FIRST LEVEL BACKBONE LABEL STRIPS SHALL BE BLACK PRINT ON WHITE BACKGROUND. SECOND LEVEL BACKBONE LABEL STRIPS SHALL BE BLACK PRINT ON GRAY BACKGROUND. LABEL STRIPS, PRE-LABELED FROM THE MANUFACTURER MAY BE USED IN LIEU OF MANUAL LABELING, AS LONG AS MANUFACTURER LABELS ARE CLEARLY VISIBLE AND DISTINGUISHABLE BY MARKING.

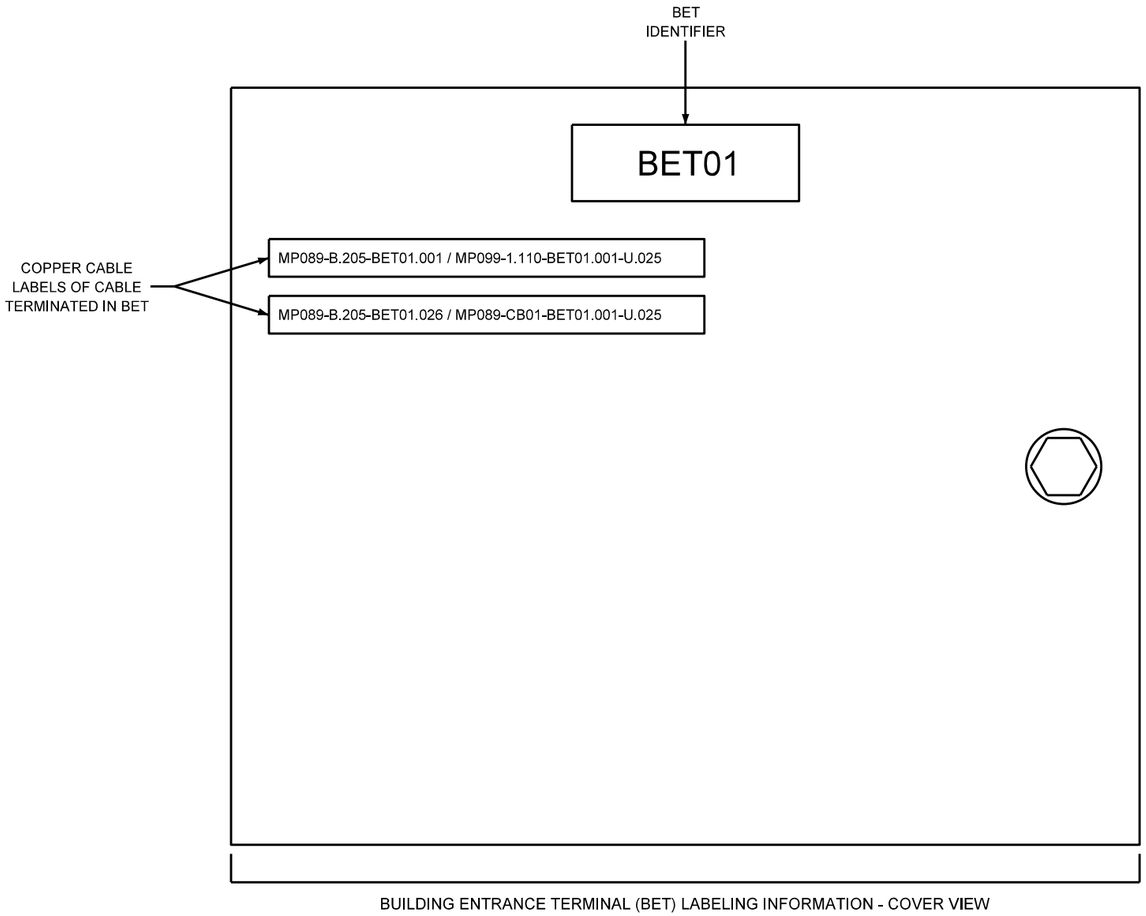

BUILDING ENTRANCE TERMINAL (BET) LABELING INFORMATION - COVER VIEW

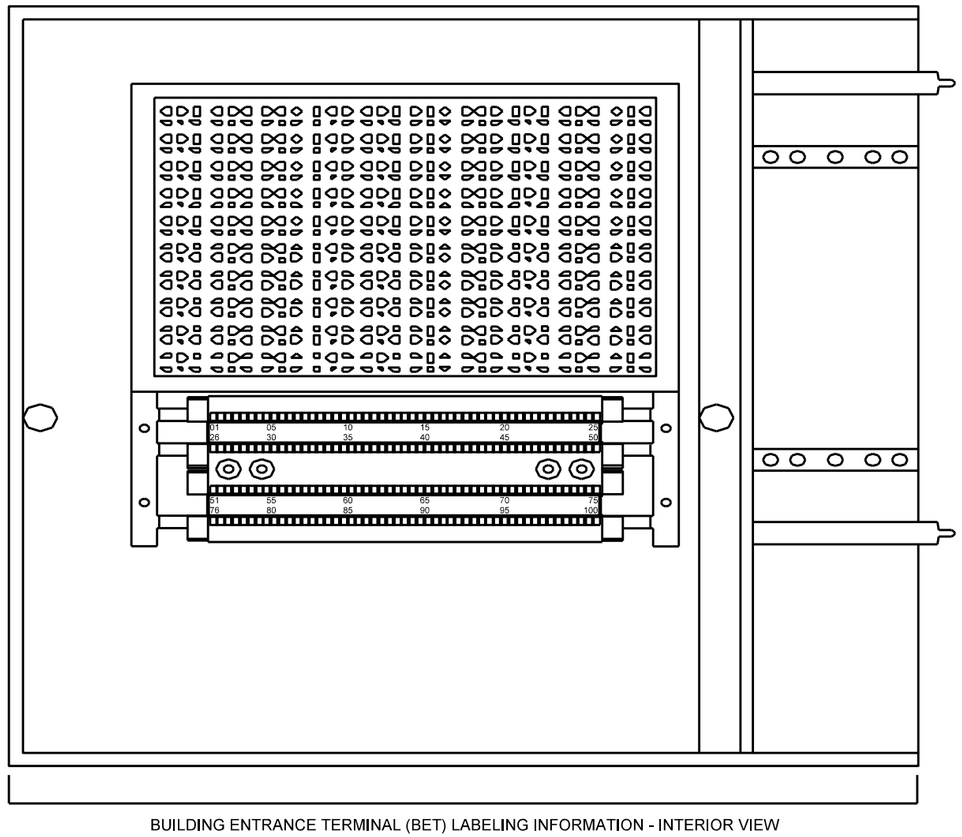

BUILDING ENTRANCE TERMINAL (BET) LABELING INFORMATION - INTERIOR VIEW

Illinois Tollway

FIGURE A-19: COPPER BUILDING ENTRANCE TERMINAL (BET) LABELING SCHEME

CAMERA
LABELING
INFORMATION

MP089.WB-CAM01

- BUILDING TYPE IDENTIFIER
- BUILDING/LOCATION IDENTIFIER
- DIRECTION OF TRAVEL
- SEQUENTIAL CAMERA NUMBER
- "CAMERA"

CAMERA LABEL

MP089.WB-CAM01

NOTES:

1. ALL DEVICES & EQUIPMENT SHALL BE LABELED.
2. LABEL SHALL BE BLACK PRINT ON WHITE BACKGROUND.
3. ALL LETTERS IN LABELS AND IDENTIFIERS SHALL BE CAPITAL LETTERS.
4. LABELS SHALL BE AFFIXED TO CAMERAS SO LABELS ARE IN VISIBLE AREA OF VIEW.
5. MULTIPLE DEVICES & EQUIPMENT SHALL BE LABELED SEQUENTIALLY.

Illinois Tollway

FIGURE A-20: DEVICE LABELING SCHEME

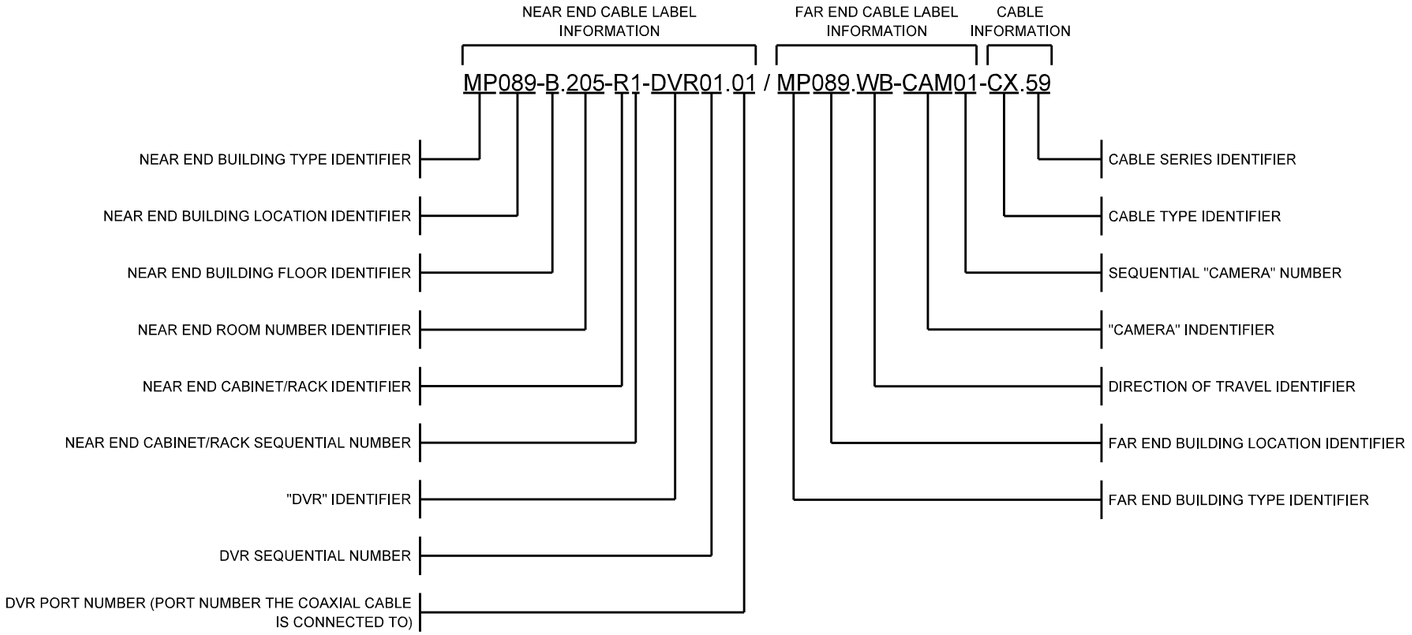

NOTES:

1. LABEL SHALL BE PLACED NO CLOSER THAN 12" FROM POINT OF CONNECTION INTO DVR OR CAMERA.
2. LABEL SHALL BE VISIBLE/VIEWABLE FROM POINT OF FINAL RESTING ORIENTATION.
3. LABEL SHALL BE MECHANICALLY IMPRINTED, SMEAR RESISTANT, FADE RESISTANT, WRAP AROUND, SELF-LAMINATING TYPE.
4. LABEL SHALL BE BLACK PRINT ON WHITE BACKGROUND.
5. LABEL SHALL BE TWO LINES OF TEXT. FIRST LINE SHALL HAVE NEAR END COMPONENT/EQUIPMENT INFORMATION. SECOND LINE SHALL HAVE FAR END COMPONENT/EQUIPMENT INFORMATION FOLLOWED BY CABLE TYPE AND CABLE SERIES.
6. ALL LETTERS IN LABELS AND IDENTIFIERS SHALL BE CAPITAL LETTERS.

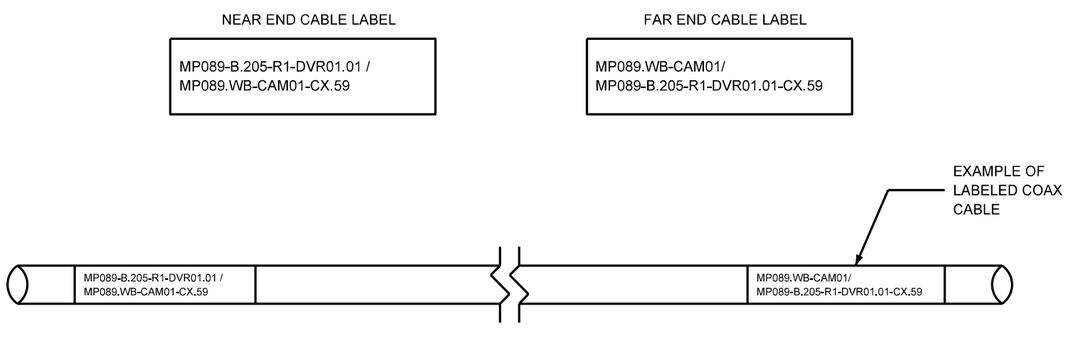

FIGURE A-21: COAXIAL DROP CABLE LABELING SCHEME

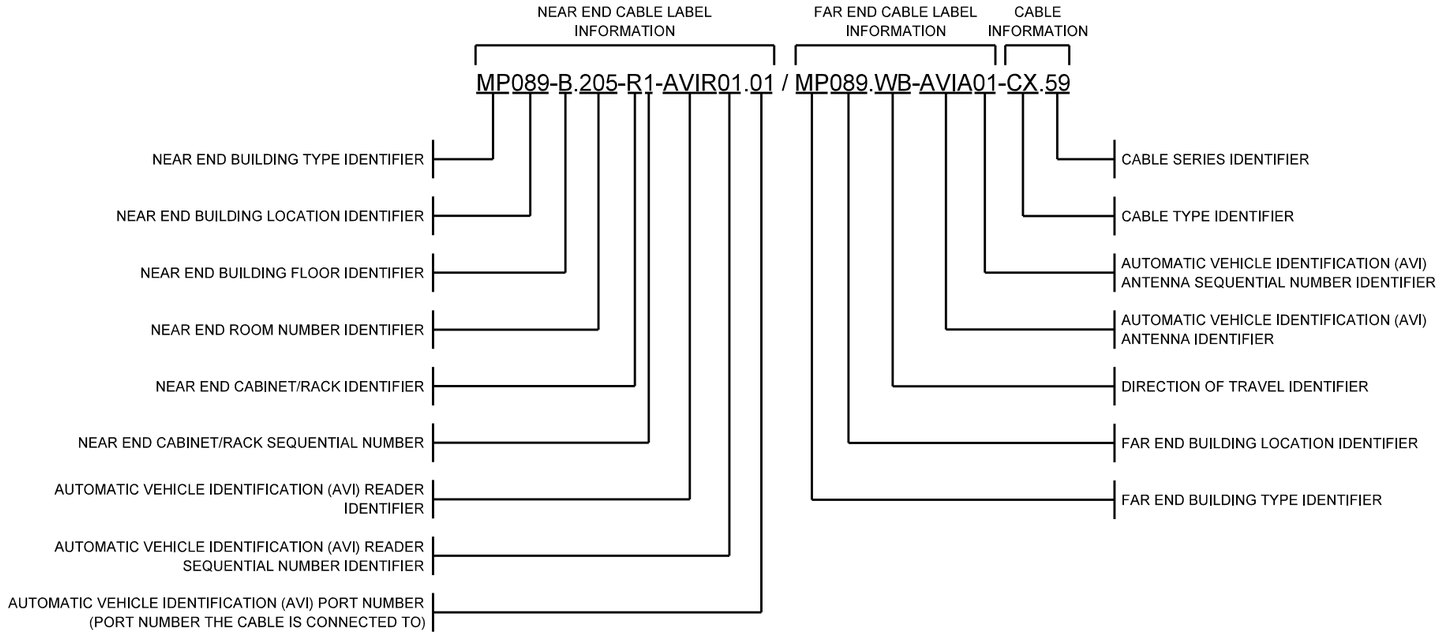

NOTES:

1. LABEL SHALL BE PLACED NO CLOSER THAN 12" FROM POINT OF CONNECTION INTO AVI CONTROLLER OR RECEIVER.
2. LABEL SHALL BE VISIBLE/VIEWABLE FROM POINT OF FINAL RESTING ORIENTATION.
3. LABEL SHALL BE MECHANICALLY IMPRINTED, SMEAR RESISTANT, FADE RESISTANT, WRAP AROUND, SELF-LAMINATING TYPE.
4. LABEL SHALL BE BLACK PRINT ON WHITE BACKGROUND.
5. LABEL SHALL BE TWO LINES OF TEXT. FIRST LINE SHALL HAVE NEAR END COMPONENT/EQUIPMENT INFORMATION. SECOND LINE SHALL HAVE FAR END COMPONENT/EQUIPMENT INFORMATION FOLLOWED BY CABLE TYPE AND CABLE SERIES.
6. ALL LETTERS IN LABELS AND IDENTIFIERS SHALL BE CAPITAL LETTERS.

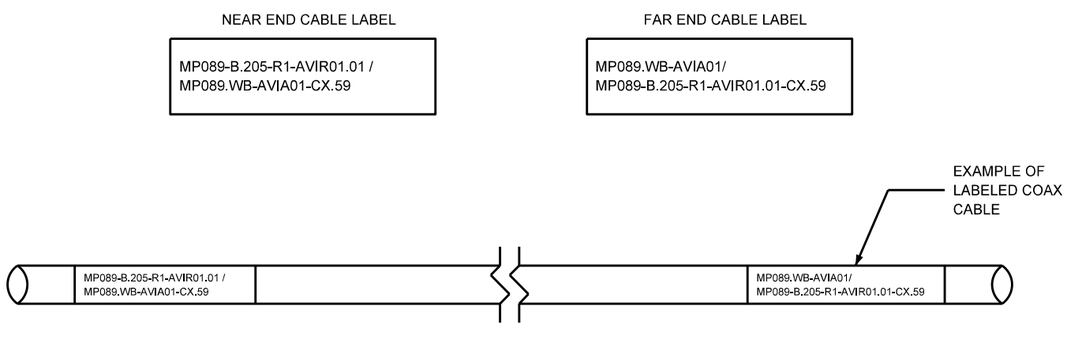

Illinois Tollway

FIGURE A-22: AVI DROP CABLE LABELING SCHEME

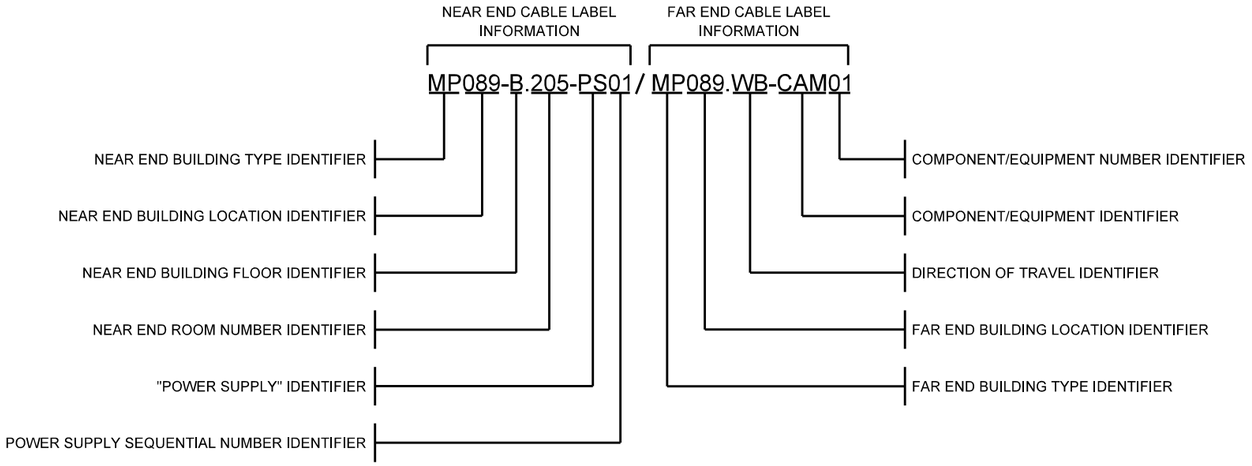

NOTES:

1. LABEL SHALL BE PLACE NO CLOSER THAN 12" FROM POINT OF CONNECTION INTO POWER SUPPLY OR EQUIPMENT POWERED.
2. LABEL SHALL BE VISIBLE/VIEWABLE FROM POINT OF FINAL RESTING ORIENTATION.
3. LABEL SHALL BE MECHANICALLY IMPRINTED, SMEAR RESISTANT, FADE RESISTANT, WRAP AROUND, SELF-LAMINATING TYPE.
4. LABEL SHALL BE BLACK PRINT ON WHITE BACKGROUND.
5. LABEL SHALL BE TWO LINES OF TEXT. FIRST LINE SHALL HAVE NEAR END COMPONENT/EQUIPMENT INFORMATION. SECOND LINE SHALL HAVE FAR END COMPONENT/EQUIPMENT INFORMATION FOLLOWED BY CABLE TYPE AND CABLE SERIES.
6. ALL LETTERS IN LABELS AND IDENTIFIERS SHALL BE CAPITAL LETTERS.

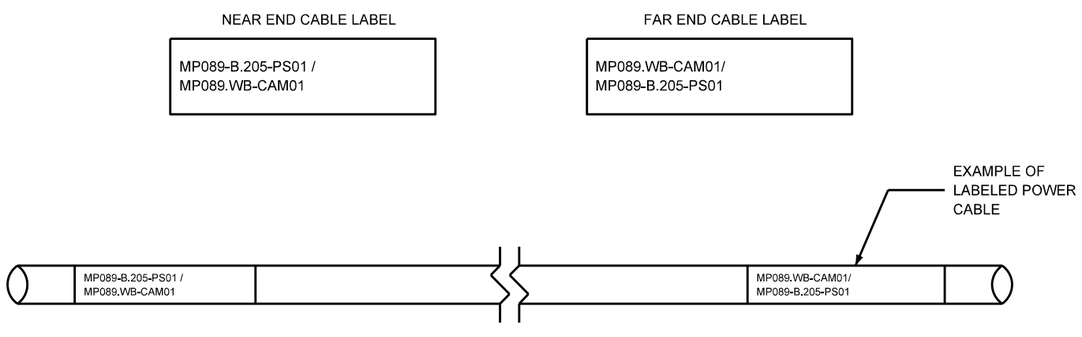

Illinois Tollway

FIGURE A-23: POWER CABLE LABELING SCHEME

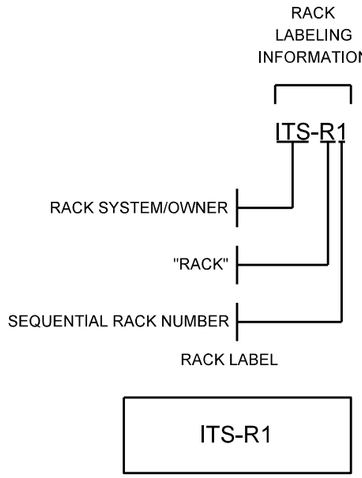

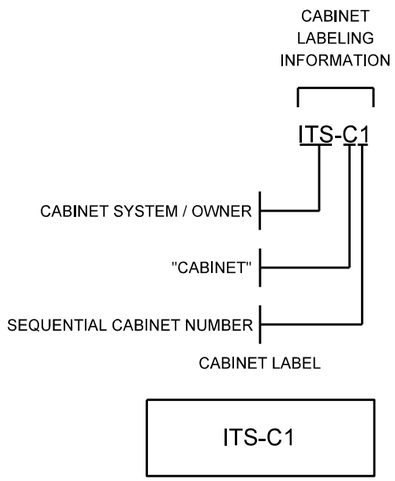

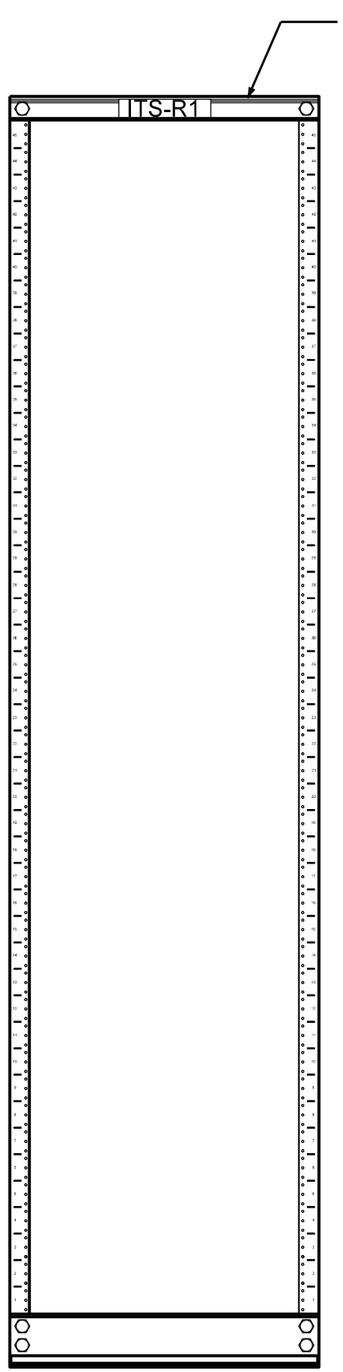

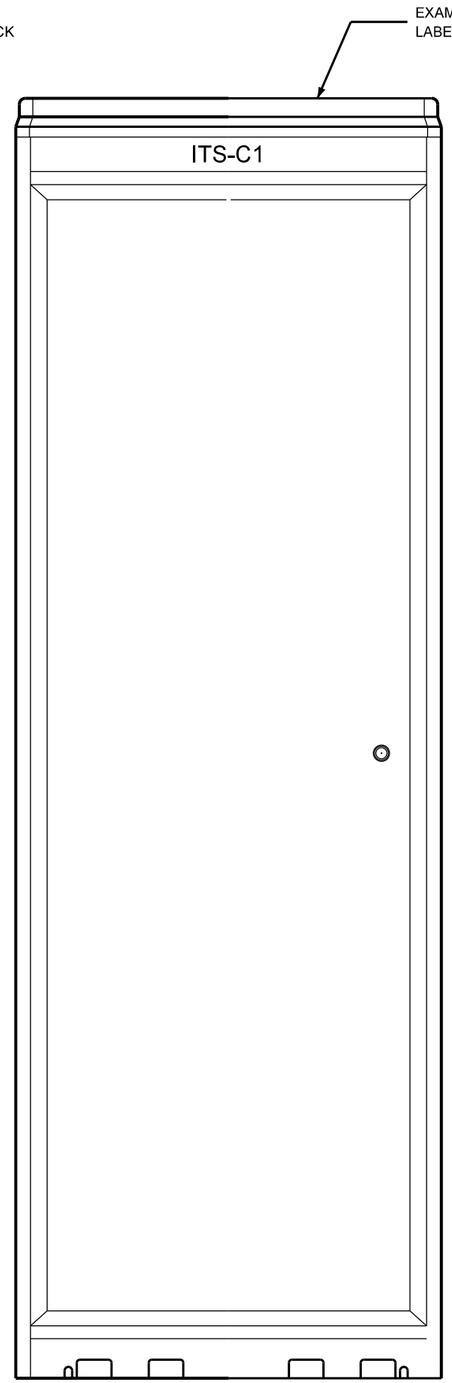

NOTES:

1. ALL CABINETS/RACKS SHALL BE LABELED.
2. LABEL SHALL BE PHENOLIC TAG TYPE.
3. LABEL SHALL BE BLACK PRINT ON WHITE BACKGROUND.
4. ALL LETTERS IN LABELS AND IDENTIFIERS SHALL BE CAPITAL LETTERS.
5. LABELS SHALL BE FASTENED TO TOP OF CABINET/RACK ON CABINET/RACK FACE. LABEL SHALL BE CENTERED ON CABINET/RACK.
6. PHENOLIC TAG SHALL BE NO LESS THAN 2 INCHES TALL AND LABEL LETTERS/NUMBERS SHALL BE NO LESS THAN 1.5 INCHES TALL. IF CABINET/RACK FACE IS LESS THAN 2 INCHES, PHENOLIC TAG SHALL BE SAME HEIGHT AS CABINET/RACK FACE; TAG SHALL HAVE 1/4 INCH SPACE AT TOP AND BOTTOM OF PHENOLIC TAG AND LABEL LETTERS/NUMBERS SHALL BE AS TALL AS REMAINING SPACE ALLOWS.

Illinois Tollway

FIGURE B-1: CABINET / EQUIPMENT RACK LABELING SCHEME

COMM / NETWORK
DEVICE LABELING
INFORMATION

5SW.01

COMM / NETWORK DEVICE IDENTIFIER

COMM / NETWORK DEVICE NUMBER

COMM / NETWORK
DEVICE LABEL

5SW.01

EXAMPLE OF LABELED
COMM / NETWORK
DEVICE

REFER TO APPENDIX C - ITS LABELING IDENTIFIERS FOR FULL LIST OF BUILDING, CABLE, AND EQUIPMENT IDENTIFICATION INFORMATION

NOTES:

1. ALL DEVICES & EQUIPMENT SHALL BE LABELED.
2. LABEL SHALL BE BLACK PRINT ON WHITE BACKGROUND.
3. ALL LETTERS IN LABELS AND IDENTIFIERS SHALL BE CAPITAL LETTERS.
4. LABELS SHALL BE FASTENED TO TOP OF RACK ON RACK FACE. LABEL SHALL BE CENTERED ON RACK.
5. DEVICES & EQUIPMENT SHALL BE LABELED ON DEVICE/EQUIPMENT FACE IN UPPER LEFT CORNER WITH DEVICE/EQUIPMENT IDENTIFIER. MULTIPLE DEVICES & EQUIPMENT SHALL BE LABELED SEQUENTIALLY.
6. IF DEVICE OR EQUIPMENT HAS NO SURFACE AREA FOR AFFIXING LABEL, LABEL SHALL BE AFFIXED TO DEVICE/EQUIPMENT MOUNTING TABS.

EXAMPLE OF LABELED
COMM / NETWORK
DEVICE WITH LABEL ON
MOUNTING TAB

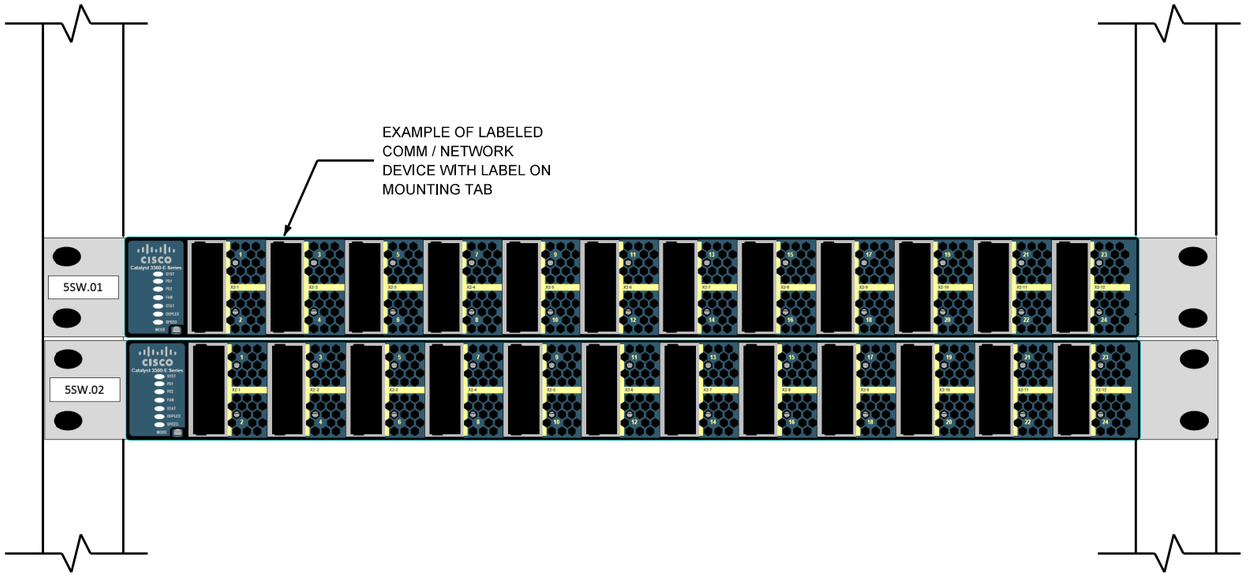

Illinois Tollway

FIGURE B-2: COMM/NETWORK EQUIPMENT LABELING SCHEME

NOTES:

1. FIBER TERMINATION SHELF SHALL BE LABELED ON SHELF COVER IN UPPER LEFT CORNER WITH SHELF IDENTIFIER. MULTIPLE FIBER TERMINATION SHELVES IN RACK SHALL BE LABELED SEQUENTIALLY. ALL FIBER TERMINATION SHELVES SHALL BE LABELED.
2. FIBER TERMINATION SHELF SHALL BE LABELED ON SHELF COVER WITH CABLE LABELS OF ALL CABLES TERMINATED IN THE FIBER TERMINATION SHELF.
3. FIBER TERMINATION PANELS SHALL BE LABELED AT TOP OF PANEL WITH PANEL IDENTIFIER. PANELS SHALL BE LABELED STARTING AT A AND LABELING THROUGH END OF PANEL. SKIPPING LETTER I IF LABELING UP TO PANEL M.
4. FIBER TERMINATION PANEL PORTS SHALL BE LABELED WITH PORT IDENTIFIER.
5. ALL LETTERS IN LABELS AND IDENTIFIERS SHALL BE CAPITAL LETTERS.
6. FIBER TERMINATION SHELF, PANEL AND PORT LABELS, PRE-LABELED FROM THE MANUFACTURER MAY BE USED IN LIEU OF MANUAL LABELING, AS LONG AS MANUFCATURER LABELS ARE CLEARLY VISIBLE AND DISTINGUISHABLE BY MARKING. ETCHED MANUFACTURER LABELS, WITH NO COLOR DISTINCTION FROM THE SURFACE LABEL IS ETCHED INTO, SHALL BE LABELED OVER PER LABELING SPECIFICATIONS.

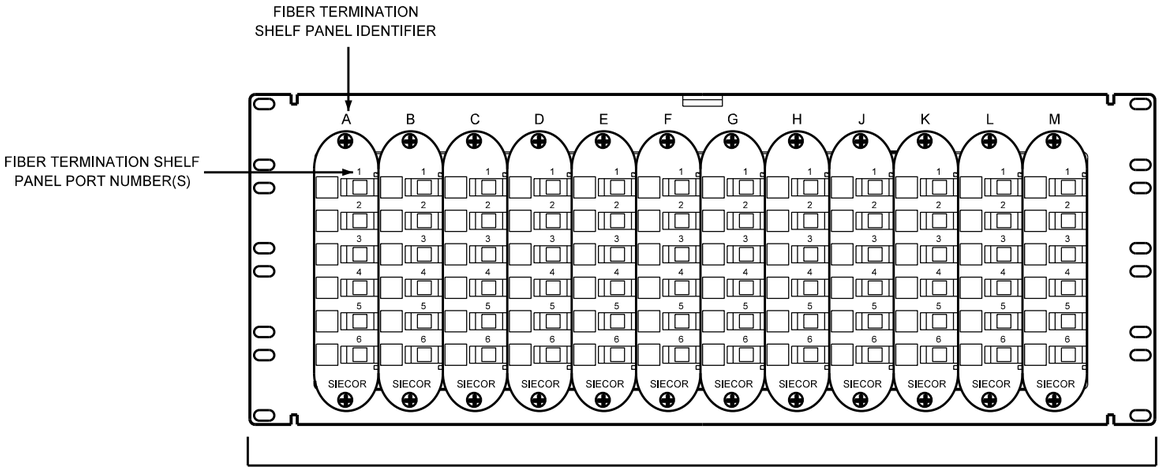

FIBER TERMINATION SHELF LABELING INFORMATION - INTERIOR VIEW

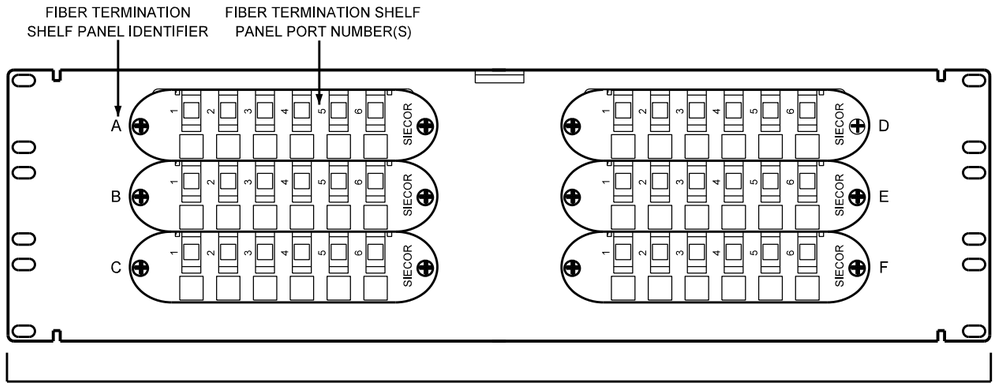

FIBER TERMINATION SHELF LABELING INFORMATION - INTERIOR VIEW

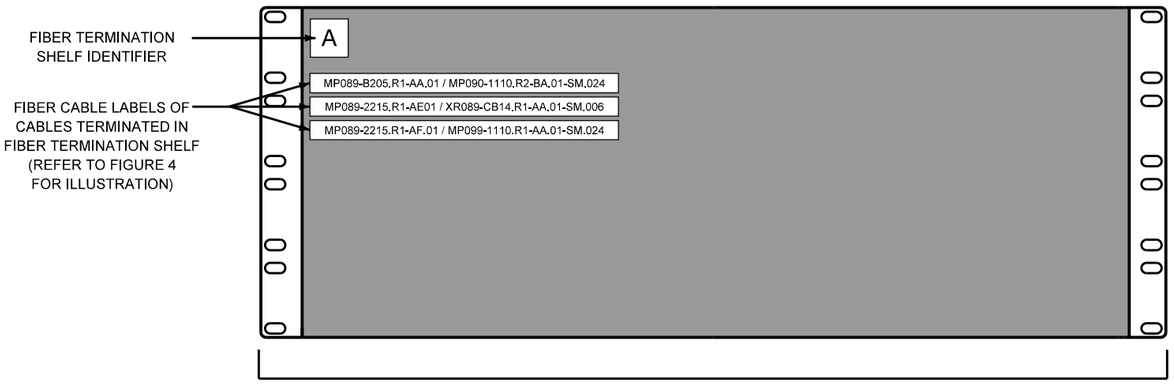

FIBER TERMINATION SHELF LABELING INFORMATION - COVER VIEW

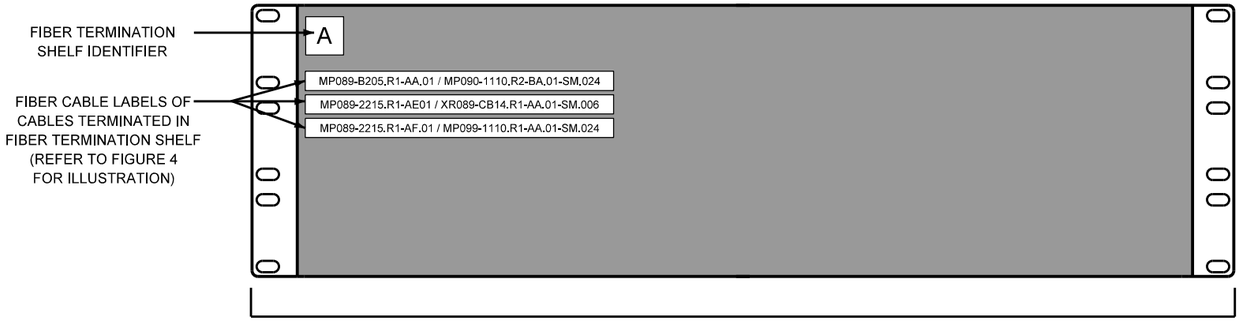

FIBER TERMINATION SHELF LABELING INFORMATION - COVER VIEW

FIGURE B-3: FIBER TERMINATION SHELF / PANEL LABELING SCHEME

Illinois Tollway

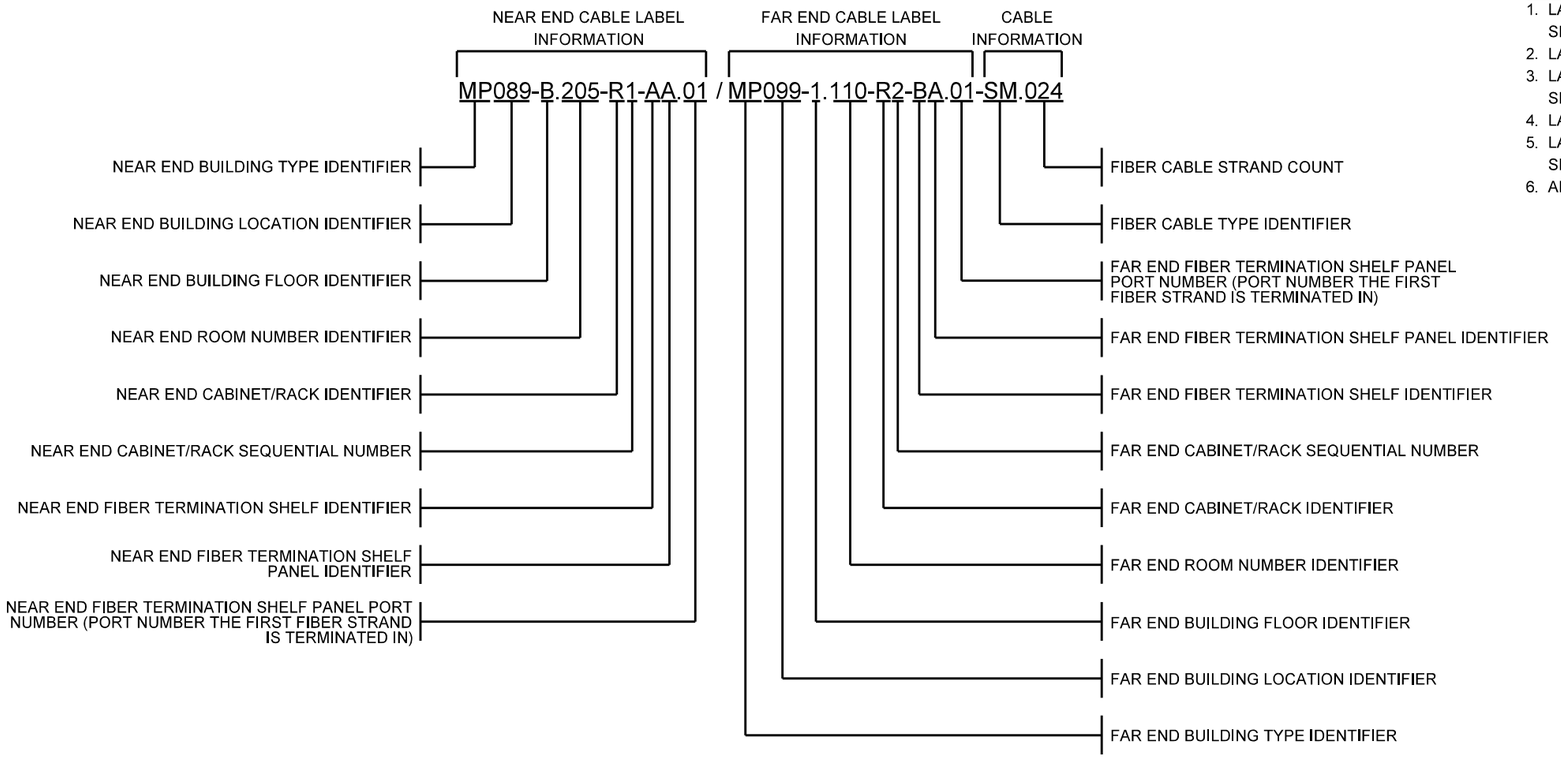

NOTES:

1. LABEL SHALL BE PLACED NO CLOSER THAN 12" FROM POINT OF ENTRY INTO FIBER TERMINATION SHELF OR SPLICE CASE.
2. LABEL SHALL BE VISIBLE/VIEWABLE FROM POINT OF FINAL RESTING ORIENTATION.
3. LABEL SHALL BE MECHANICALLY IMPRINTED, SMEAR RESISTANT, FADE RESISTANT, WRAP AROUND, SELF-LAMINATING TYPE.
4. LABEL SHALL BE BLACK PRINT ON WHITE BACKGROUND.
5. LABEL SHALL BE TWO LINES OF TEXT. FIRST LINE SHALL HAVE NEAR END BUILDING INFORMATION. SECOND LINE SHALL HAVE FAR END BUILDING INFORMATION FOLLOWED BY CABLE TYPE AND STRAND COUNT.
6. ALL LETTERS IN LABELS AND IDENTIFIERS SHALL BE CAPITAL LETTERS.

NEAR END CABLE LABEL

MP089-B.205-R1-AA.01 /
MP099-1.110-R2-BA.01-SM.024

FAR END CABLE LABEL

MP099-1.110-R2-BA.01 /
MP089-B.205-R1-AA.01-SM.024

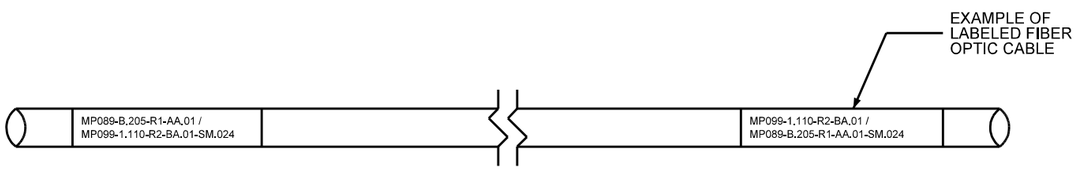

Illinois Tollway

FIGURE B-4: FIBER OPTIC BACKBONE & DROP CABLE LABELING SCHEME - BUILDING TO BUILDING

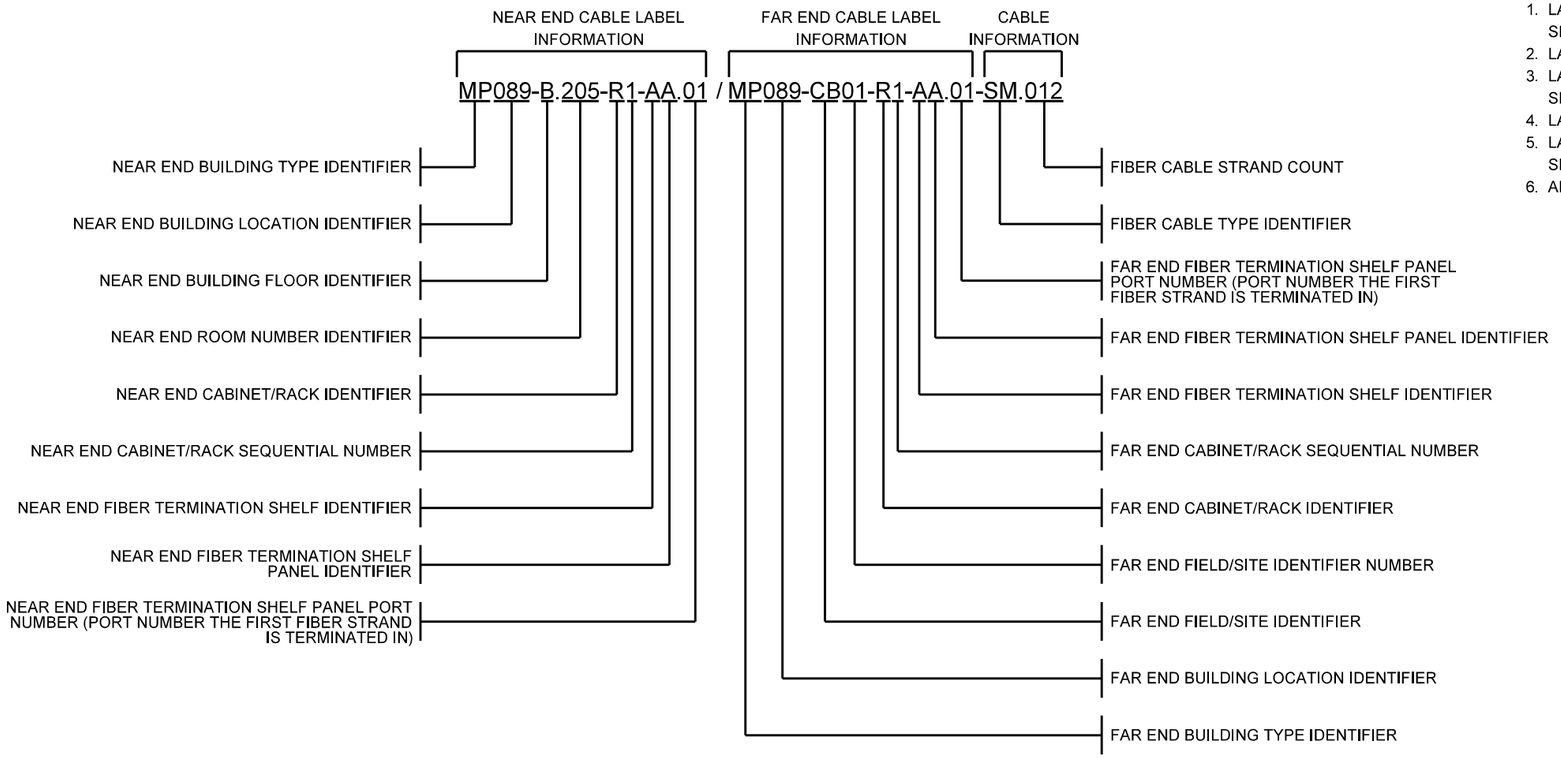

NOTES:

1. LABEL SHALL BE PLACED NO CLOSER THAN 12" FROM POINT OF ENTRY INTO FIBER TERMINATION SHELF OR SPLICE CASE.
2. LABEL SHALL BE VISIBLE/VIEWABLE FROM POINT OF FINAL RESTING ORIENTATION.
3. LABEL SHALL BE MECHANICALLY IMPRINTED, SMEAR RESISTANT, FADE RESISTANT, WRAP AROUND, SELF-LAMINATING TYPE.
4. LABEL SHALL BE BLACK PRINT ON WHITE BACKGROUND.
5. LABEL SHALL BE TWO LINES OF TEXT. FIRST LINE SHALL HAVE NEAR END BUILDING INFORMATION. SECOND LINE SHALL HAVE FAR END BUILDING INFORMATION FOLLOWED BY CABLE TYPE AND STRAND COUNT.
6. ALL LETTERS IN LABELS AND IDENTIFIERS SHALL BE CAPITAL LETTERS.

NEAR END CABLE LABEL

MP089-B.205-R1-AA.01 /
MP089-CB01-R1-AA.01-SM.012

FAR END CABLE LABEL

MP089-CB01-R1-AA.01 /
MP089-B.205-R1-AA.01-SM.012

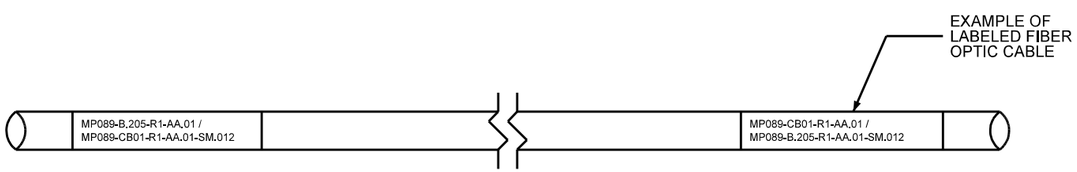

Illinois Tollway

FIGURE B-5: FIBER CABLE BACKBONE/DROP CABLE LABELING SCHEME (BUILDING TO FIELD SITE)

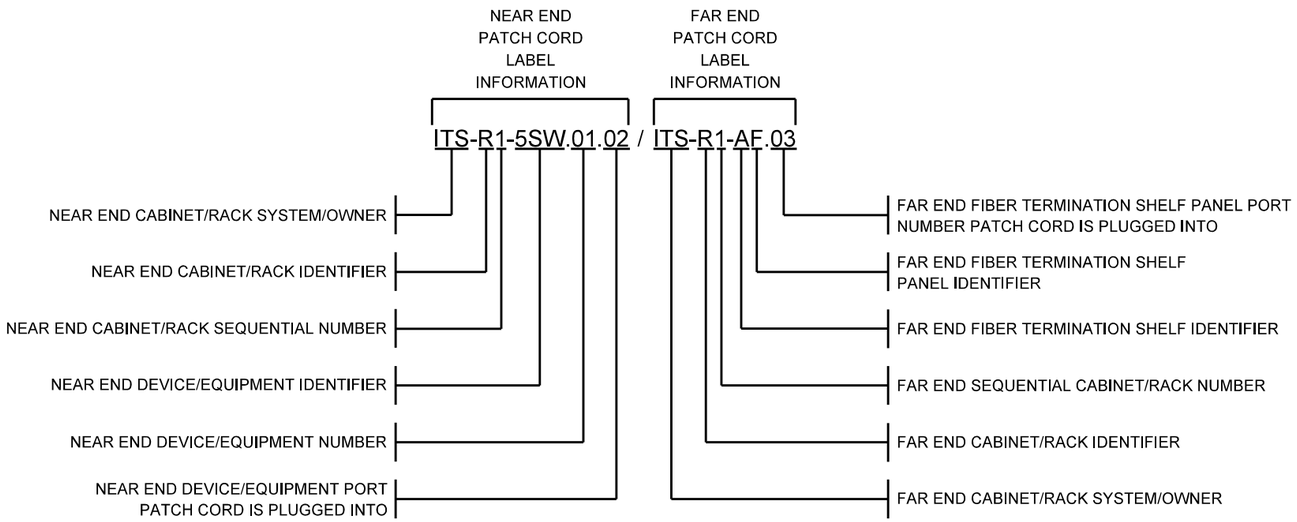

NOTES:

1. LABEL SHALL BE PLACED NO CLOSER THAN 6" FROM CONNECTION POINT.
2. LABEL SHALL BE VISIBLE/VIEWABLE FROM POINT OF FINAL RESTING ORIENTATION.
3. LABEL SHALL BE MECHANICALLY IMPRINTED, SMEAR RESISTANT, FADE RESISTANT, WRAP AROUND, SELF-LAMINATING TYPE.
4. LABEL SHALL BE BLACK PRINT ON WHITE BACKGROUND.
5. ALL LETTERS IN LABELS AND IDENTIFIERS SHALL BE CAPITAL LETTERS.

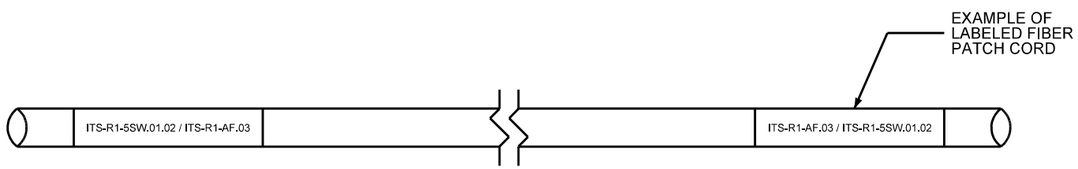

FIGURE B-6: FIBER CABLE PATCH CORD LABELING SCHEME (EQUIP TO FIBER SHELF)

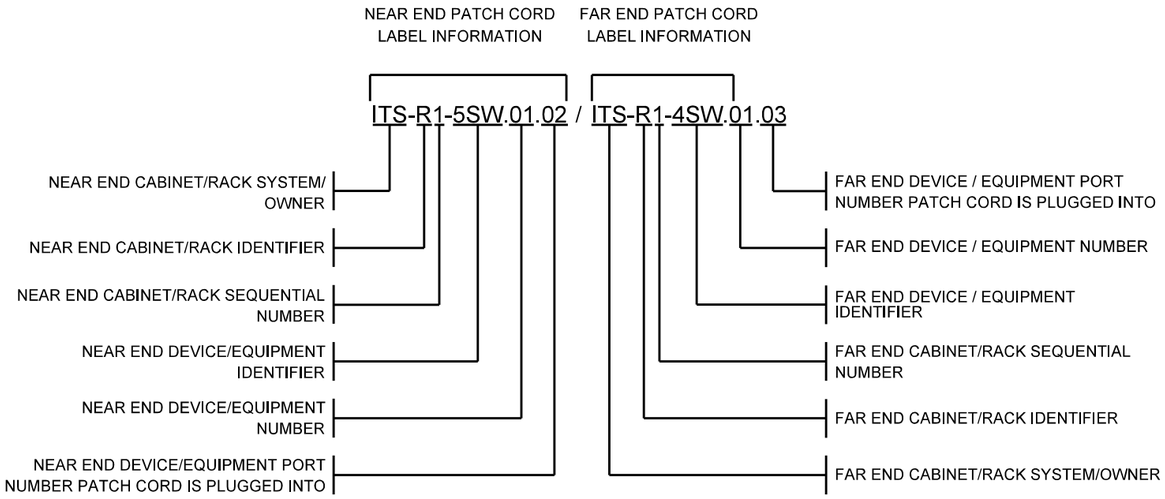

NOTES:
1. LABEL SHALL BE PLACED NO CLOSER THAN 6" FROM CONNECTION POINT.
2. LABEL SHALL BE VISIBLE / VIEWABLE FROM POINT OF FINAL RESTING ORIENTATION.
3. LABEL SHALL BE MECHANICALLY IMPRINTED, SMEAR RESISTANT, FADE RESISITANT, WRAP AROUND, SELF-LAMINATING TYPE.
4. LABEL SHALL BE BLACK PRINT ON WHITE BACKGROUND.
5. ALL LETTERS IN LABELS AND IDENTIFIERS SHALL BE IN CAPITAL LETTERS.

NEAR END PATCH CORD LABEL

ITS-R1-5SW.01.02 / ITS-R1-4SW.01.03

FAR END PATCH CORD LABEL

ITS-R1-4SW.01.03 / ITS-R1-5SW.01.04

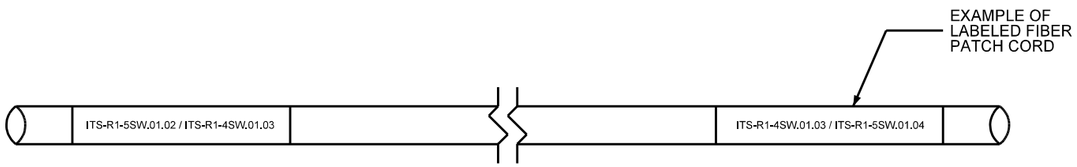

Illinois Tollway

FIGURE B-7: FIBER CABLE PATCH CORD LABELING SCHEME (EQUIP TO EQUIP)

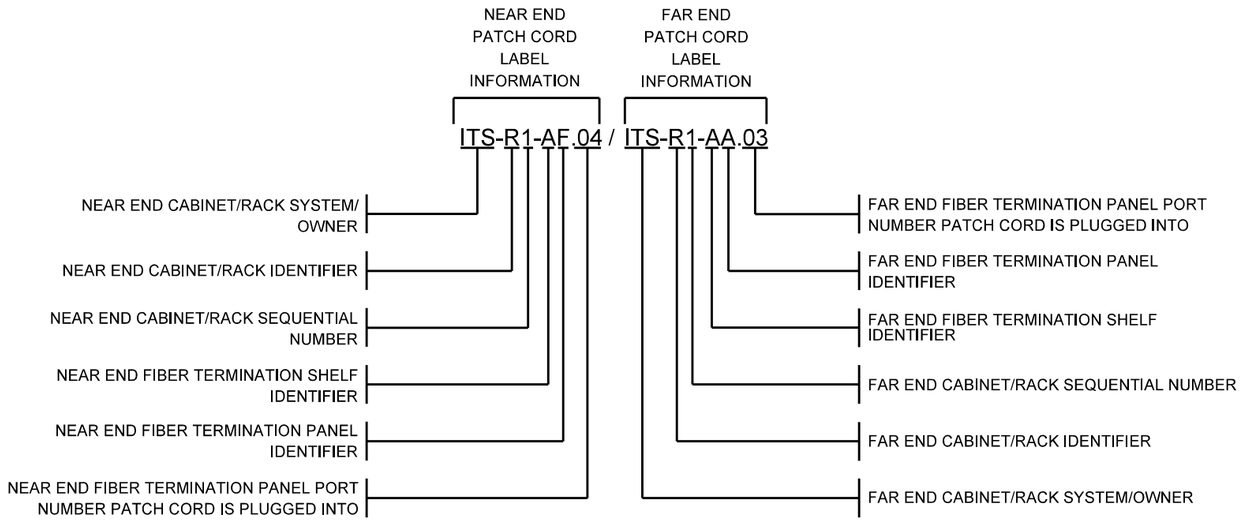

NOTES:

1. LABEL SHALL BE PLACED NO CLOSER THAN 6" FROM CONNECTION POINT.
2. LABEL SHALL BE VISIBLE / VIEWABLE FROM POINT OF FINAL RESTING ORIENTATION.
3. LABEL SHALL BE MECHANICALLY IMPRINTED, SMEAR RESISTANT, FADE RESISITANT, WRAP AROUND, SELF-LAMINATING TYPE.
4. LABEL SHALL BE BLACK PRINT ON WHITE BACKGROUND.
5. ALL LETTERS IN LABELS AND IDENTIFIERS SHALL BE IN CAPITAL LETTERS.

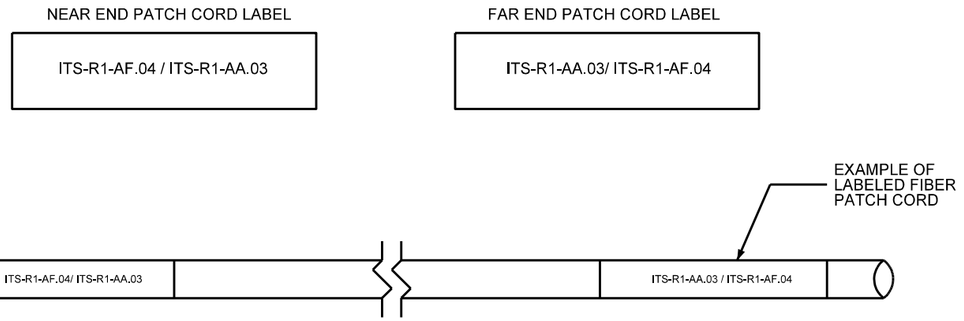

FIGURE B-8: FIBER CABLE PATCH CORD LABELING SCHEME (FIBER SHELF TO FIBER SHELF)

NOTES:

1. ALL GROUNDING BUSBARS SHALL BE LABELED.
2. LABELS SHALL BE PHENOLIC TAG TYPE.
3. LABEL SHALL BE BLACK PRINT ON YELLOW BACKGROUND.
4. ALL LETTERS IN LABELS AND IDENTIFIERS SHALL BE CAPITAL LETTERS.
5. LABELS SHALL BE FASTENED TO SIDE OF TMGB OR TGB, SO AS TO KEEP LABEL FROM BEING COVERED UP BY BONDING CONDUCTOR AND CONNECTIONS.
6. LABEL SHALL BE LEVEL WITH TOP OF TMGB OR TGB.
7. PHENOLIC TAG SHALL BE NO LESS THAN 2 INCHES TALL AND LABEL LETTERS/NUMBERS SHALL BE NO LESS THAN 1.5 INCHES TALL.

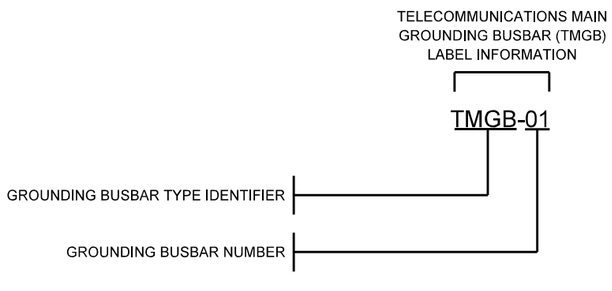

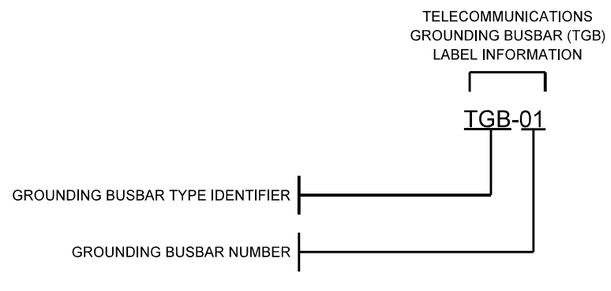

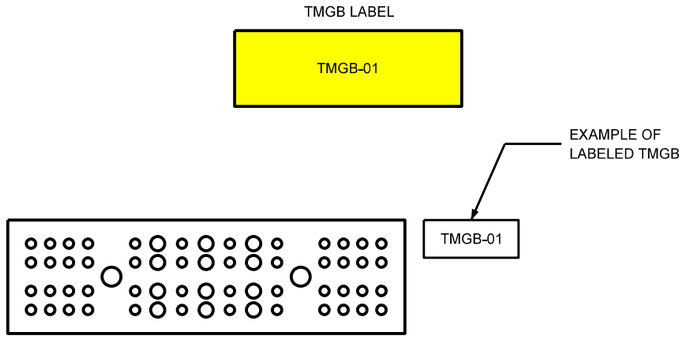

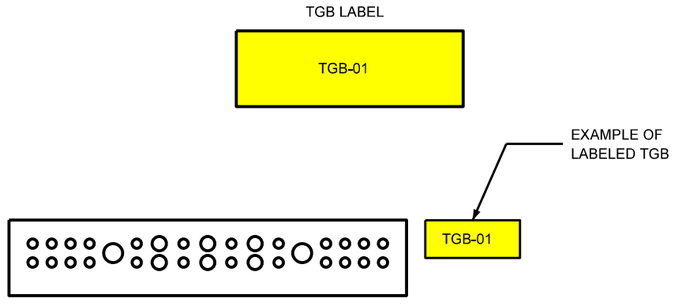

FIGURE B-9: GROUND BUSBAR LABELING SCHEME

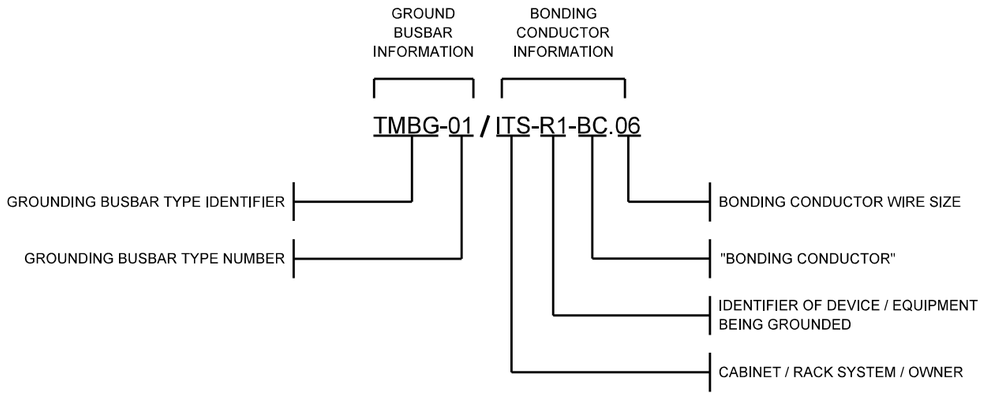

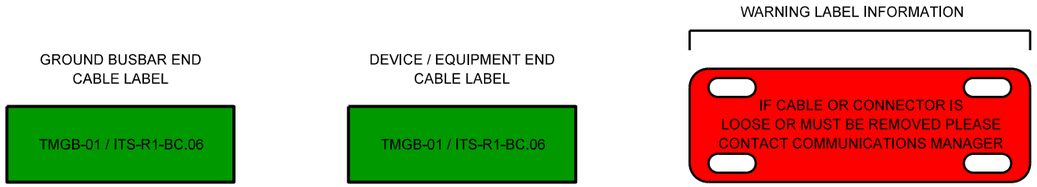

NOTES:

A. BONDING CONDUCTOR LABELS
   1. ALL BONDING CONDUCTORS SHALL BE LABELED.
   2. LABEL SHALL BE PLACED NO CLOSER THAN 6" FROM POINT OF BONDING CONNECTION TO GROUNDING BUSBAR.
   3. LABEL SHALL BE VISIBLE / VIEWABLE FROM POINT OF FINAL RESTING ORIENTATION.
   4. LABEL SHALL BE MECHANICALLY IMPRINTED, SMEAR RESISTANT, FADE RESISTANT, WRAP AROUND, SELF LAMINATING TYPE.
   5. LABEL SHALL BE BLACK PRINT ON GREEN BACKGROUND.
   6. ALL LETTERS IN LABELS AND IDENTIFIERS SHALL BE CAPITAL LETTERS.

B. WARNING LABELS
   1. ALL BONDING CONDUCTORS SHALL HAVE WARNING LABELS.
   2. LABELS SHALL BE PLACED NEAR BONDING CONDUCTOR CABLE LABEL.
   3. LABELS SHALL BE THERMAL MARKER TRANSFER PLATE TYPE.
   4. WARNING LABELS SHALL BE BLACK PRINT ON RED BACKGROUND.
   5. ALL LETTERS ON WARNING LABELS SHALL BE CAPITAL LETTERS.

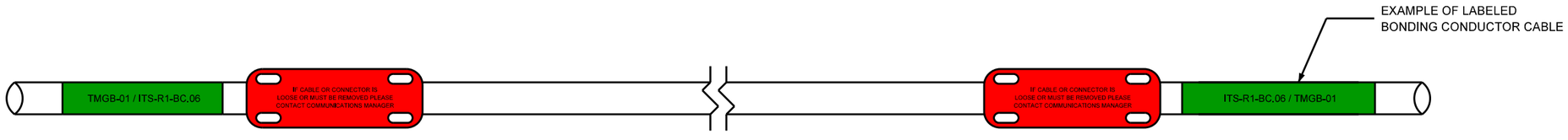

Illinois Tollway

FIGURE B-10: BONDING CONDUCTOR LABELING SCHEME

TERMINAL PANEL BOARD (TPB)
LABEL INFORMATION

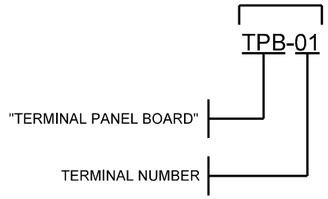

TERMINAL PANEL BOARD LABEL

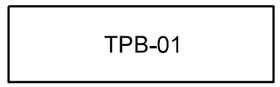

NOTES:

1. ALL TERMINAL PANEL BOARDS SHALL BE LABELED.
2. LABEL SHALL BE PHENOLIC TAG TYPE.
3. LABEL SHALL BE BLACK PRINT ON WHITE BACKGROUND.
4. ALL LETTERS IN LABELS AND IDENTIFIERS SHALL BE IN CAPITAL LETTERS.
5. LABELS SHALL BE FASTENED TO SIDE OF TERMINAL STRIP ON BOARD FACE, SO AS TO KEEP LABEL FROM BEING COVERED UP BY CONDUCTORS AND CONNECTIONS. LABEL SHALL BE LEVEL WITH TOP OF TERMINAL STRIP.
6. PHENOLIC TAG SHALL BE NO LESS THAN 1.5 INCHES TALL AND LABEL LETTERS/NUMBERS SHALL BE NO LESS THAN 1 INCHES TALL. TAG SHALL HAVE 1/4 INCH SPACE AT TOP AND BOTTOM OF PHENOLIC TAG AND LABEL LETTERS/NUMBERS SHALL BE AS TALL AS REMAINING SPACE ALLOWS.

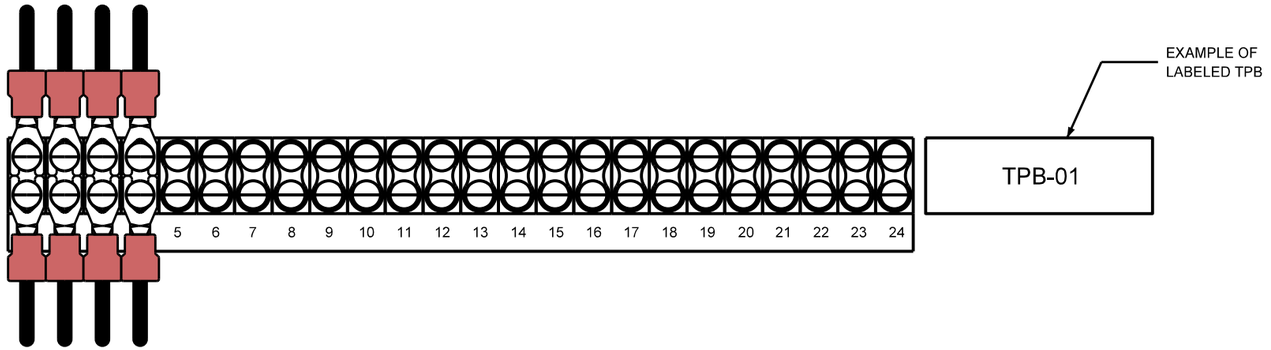

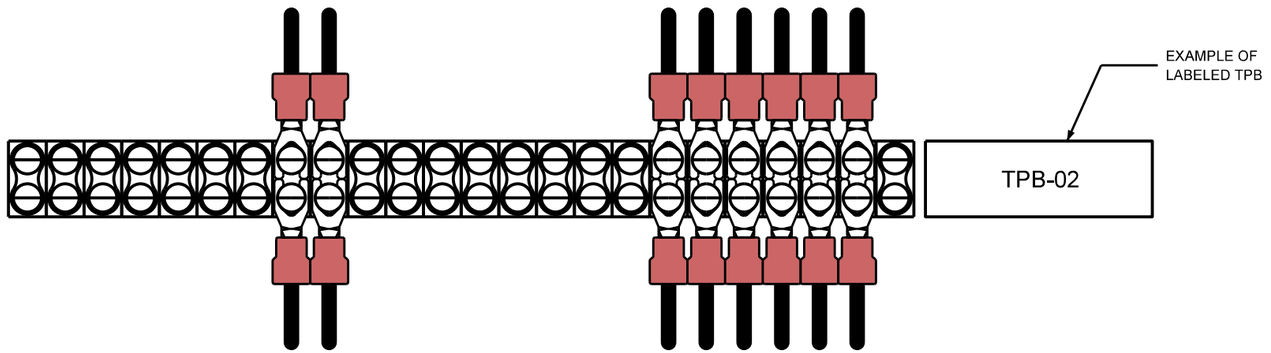

FIGURE B-11: TERMINAL PANEL BOARD LABELING SCHEME

CABINET LABELING INFORMATION

088W-123.67-CAB001

- BUILDING/ROADWAY IDENTIFIER
- DIRECTION OF TRAVEL
- MILE MARKER (NEAREST .01 MILE)
- CABINET NUMBER
- "CABINET"

HANDHOLE IDENTIFICATION INFORMATION

088W-123.67-HHX001

- BUILDING/ROADWAY IDENTIFIER
- DIRECTION OF TRAVEL
- MILE MARKER (NEAREST .01 MILE)
- HANDHOLE NUMBER
- "HANDHOLE", WHERE X = C FOR "COMMUNICATIONS" OR E FOR "ELECTRICAL"

CABINET LABEL

088W-123.67-CAB001

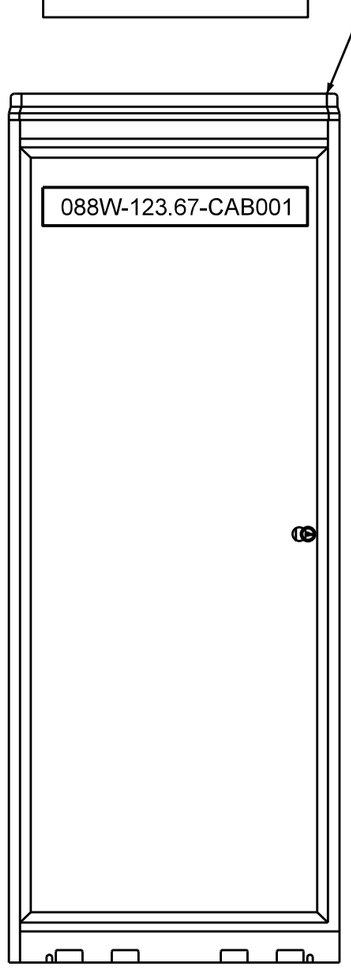

REFER TO APPENDIX C - ITS LABELING IDENTIFIERS FOR FULL LIST OF BUILDING, CABLE, AND EQUIPMENT IDENTIFICATION INFORMATION

NOTES:

A. GENERAL
   1. ALL FIELD/SITE ENCLOSURES (APART FROM HANDHOLES) SHALL BE LABELED.
   2. LABEL SHALL BE PHENOLIC TAG TYPE.
   3. LABEL SHALL BE BLACK PRINT ON WHITE BACKGROUND.
   4. ALL LETTERS IN LABELS AND IDENTIFIERS SHALL BE IN CAPITAL LETTERS.
   5. ALL CABLES INSIDE HANDHOLES/MAINTENANCE HOLES SHALL BE LABELED WITHIN 12 INCHES OF ALL ENTRY/EXIT POINTS.

B. CABINETS
   1. LABELS SHALL BE FASTENED TO TOP OF CABINET DOOR ON DOOR FACE. LABEL SHALL BE CENTERED ON CABINET DOOR.
   2. PHENOLIC TAG SHALL BE NO LESS THAN 2 INCHES TALL AND LABEL LETTERS/NUMBERS SHALL BE NO LESS THAN 1.5 INCHES TALL.

C. HANDHOLES
   1. HANDHOLES SHALL NOT BE PHYSICALLY LABELED; RATHER HANDHOLE IDENTIFICATION INFORMATION IS PROVIDED FOR DOCUMENTATION PURPOSES ONLY.

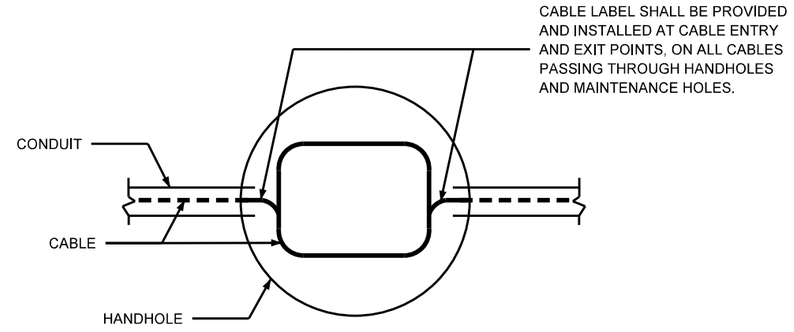

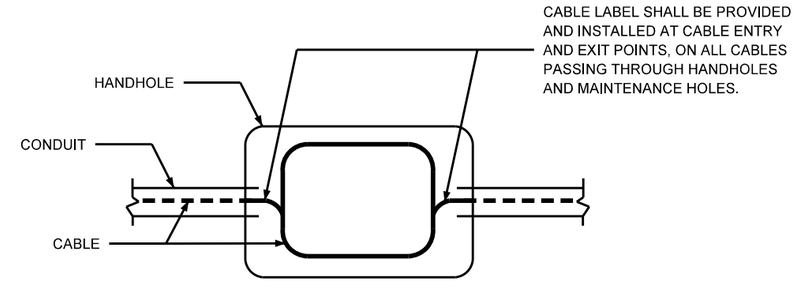

Illinois Tollway

FIGURE B-12: FIELD / SITE SPACE LABELING SCHEME

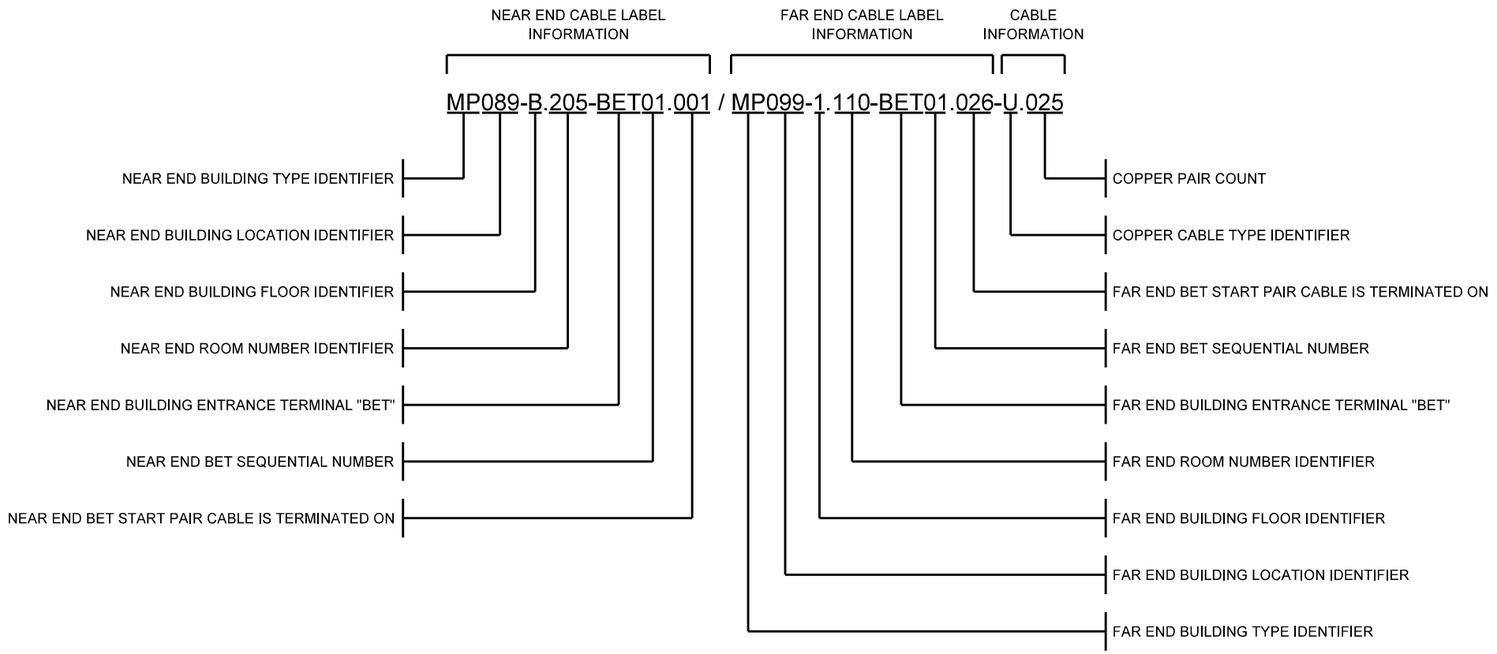

NOTES:

1. LABELS SHALL BE PLACED NO CLOSER THAN 12" FROM POINT OF ENTRY INTO COPPER PATCH PANEL OR SPLICE CASE.
2. LABEL SHALL BE VISIBLE / VIEWABLE FROM POINT OF FINAL RESTING ORIENTATION.
3. LABEL SHALL BE MECHANICALLY IMPRINTED, SMEAR RESISTANT, FADE RESISTANT, WRAP AROUND, SELF-LAMINATING TYPE.
4. LABEL SHALL BE BLACK PRINT ON WHITE BACKGROUND.
5. LABEL SHALL BE TWO LINES OF TEXT. FIRST LINE SHALL HAVE NEAR END BUILDING INFORMATION. SECOND LINE SHALL HAVE FAR END BUILDING INFORMATION FOLLOWED BY CABLE TYPE AND PAIR COUNT.
6. ALL LETTERS IN LABELS AND IDENTIFIERS SHALL BE CAPITAL LETTERS.

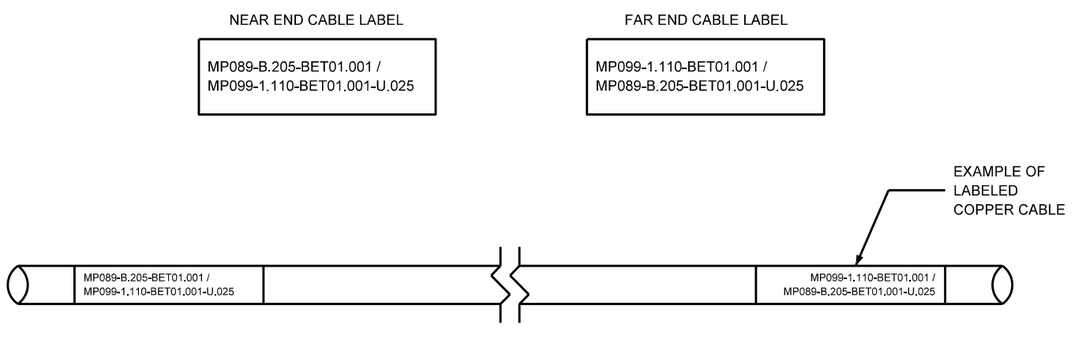

Illinois Tollway

FIGURE B-13: COPPER BACKBONE/DROP CABLE LABELING SCHEME (BUILDING TO BUILDING)

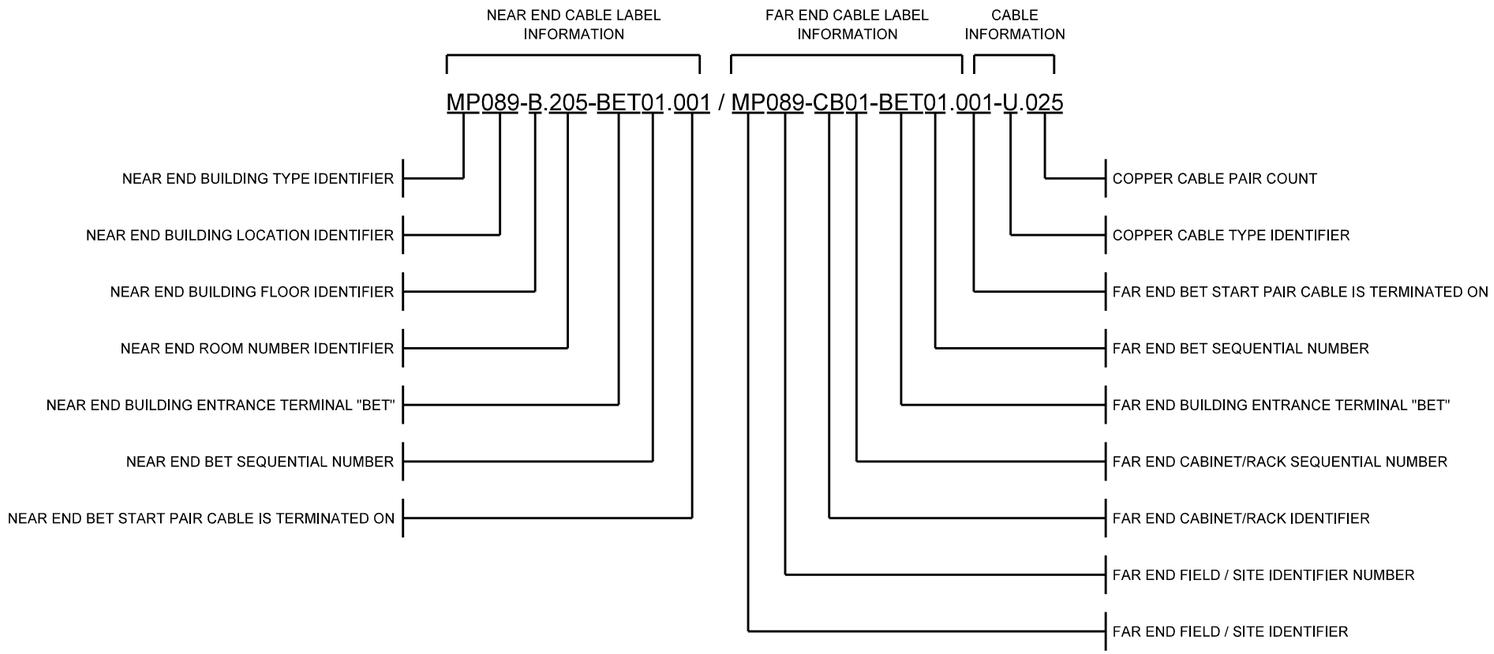

NOTES:

1. LABELS SHALL BE PLACED NO CLOSER THAN 12" FROM POINT OF ENTRY INTO COPPER PATCH PANEL OR SPLICE CASE.
2. LABEL SHALL BE VISIBLE / VIEWABLE FROM POINT OF FINAL RESTING ORIENTATION.
3. LABEL SHALL BE MECHANICALLY IMPRINTED, SMEAR RESISTANT, FADE RESISTANT, WRAP AROUND, SELF-LAMINATING TYPE.
4. LABEL SHALL BE BLACK PRINT ON WHITE BACKGROUND.
5. LABEL SHALL BE TWO LINES OF TEXT. FIRST LINE SHALL HAVE NEAR END BUILDING INFORMATION. SECOND LINE SHALL HAVE FAR END BUILDING INFORMATION FOLLOWED BY CABLE TYPE AND PAIR COUNT.
6. ALL LETTERS IN LABELS AND IDENTIFIERS SHALL BE CAPITAL LETTERS.

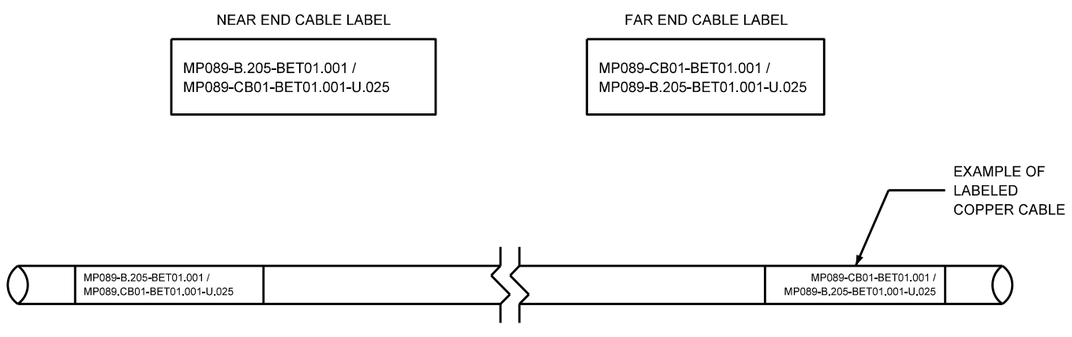

Illinois Tollway

FIGURE B-14: COPPER BACKBONE/DROP CABLE LABELING SCHEME (BUILDING TO FIELD SITE)

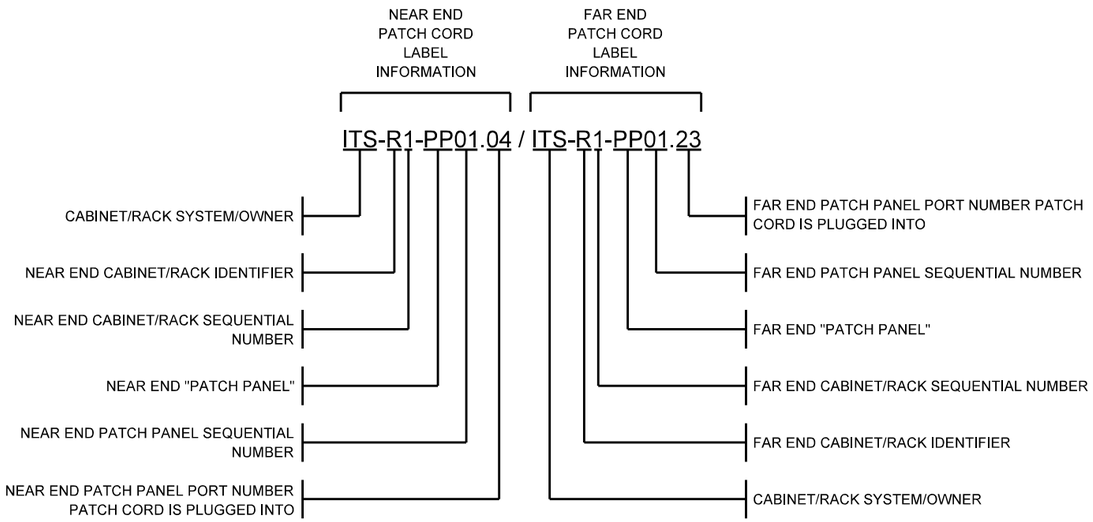

NEAR END PATCH CORD LABEL

ITS-R1-PP01.04 / ITS-R1-PP01.23

FAR END PATCH CORD LABEL

ITS-R1-PP01.23 / ITS-R1-PP01.04

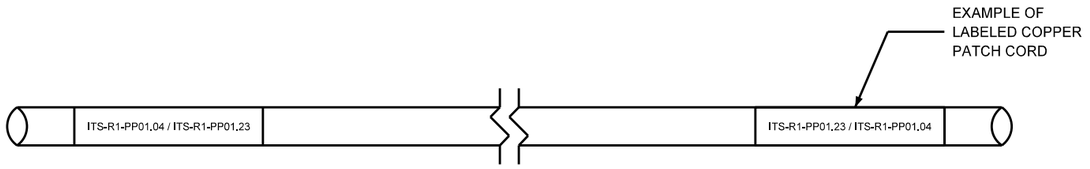

NOTES:

1. LABEL SHALL BE PLACED NO CLOSER THAN 6" FROM CONNECTION POINT.
2. LABEL SHALL BE VISIBLE / VIEWABLE FROM POINT OF FINAL RESTING ORIENTATION.
3. LABEL SHALL BE MECHANICALLY IMPRINTED, SMEAR RESISTANT, FADE RESISITANT, WRAP AROUND, SELF-LAMINATING TYPE.
4. LABEL SHALL BE BLACK PRINT ON WHITE BACKGROUND.
5. ALL LETTERS IN LABELS AND IDENTIFIERS SHALL BE CAPITAL LETTERS.

Illinois Tollway

FIGURE B-15: COPPER PATCH CORD LABELING SCHEME (PATCH PANEL TO PATCH PANEL)

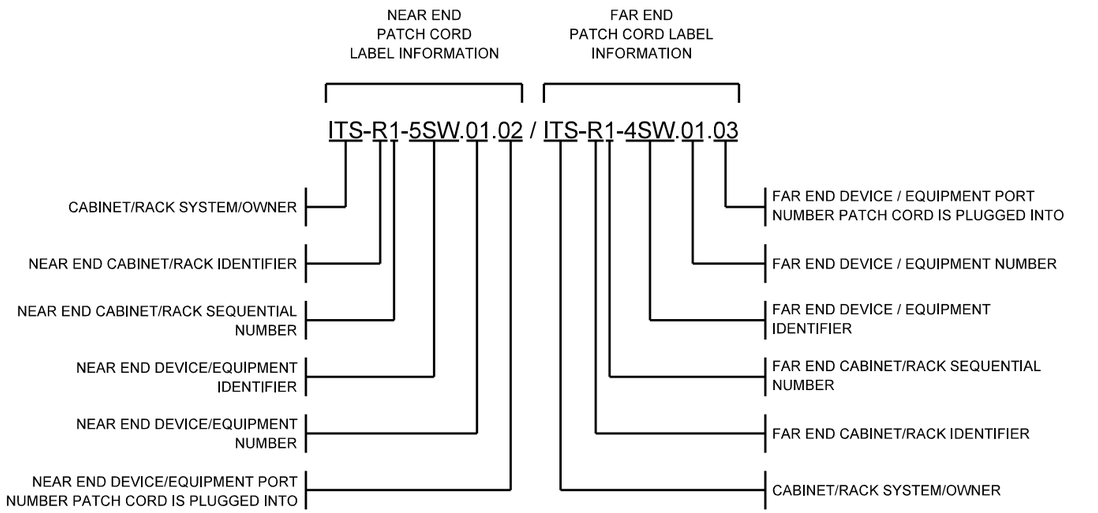

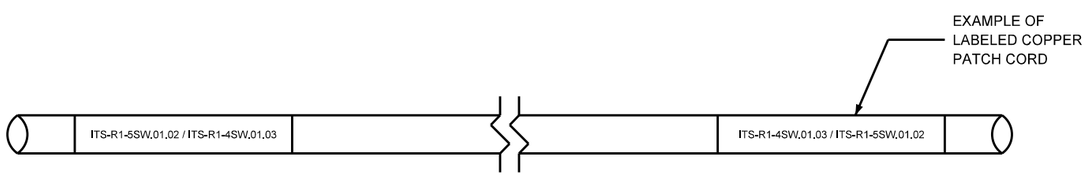

NOTES:
1. LABEL SHALL BE PLACED NO CLOSER THAN 6" FROM CONNECTION POINT.
2. LABEL SHALL BE VISIBLE / VIEWABLE FROM POINT OF FINAL RESTING ORIENTATION.
3. LABEL SHALL BE MECHANICALLY IMPRINTED, SMEAR RESISTANT, FADE RESISITANT, WRAP AROUND, SELF-LAMINATING TYPE.
4. LABEL SHALL BE BLACK PRINT ON WHITE BACKGROUND.
5. ALL LETTERS IN LABELS AND IDENTIFIERS SHALL BE CAPITAL LETTERS.

Illinois Tollway

FIGURE B-16: COPPER PATCH CORD LABELING SCHEME (DEVICE/EQUIP TO DEVICE/EQUIP)

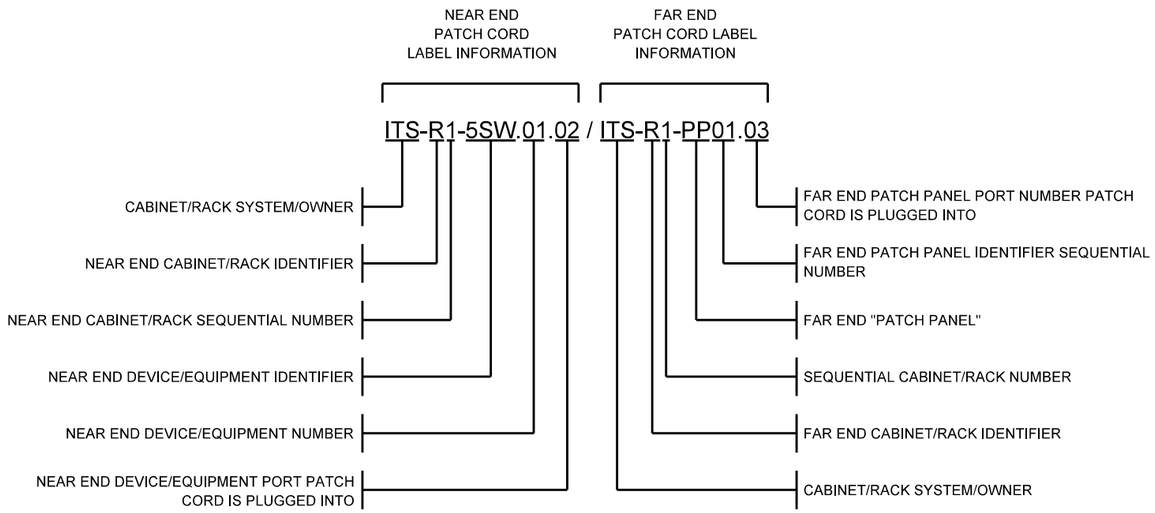

NEAR END PATCH CORD LABEL

ITS-R1-5SW.01.02 / ITS-R1-PP01.03

FAR END PATCH CORD LABEL

ITS-R1-PP01.03 / ITS-R1-5SW.01.02

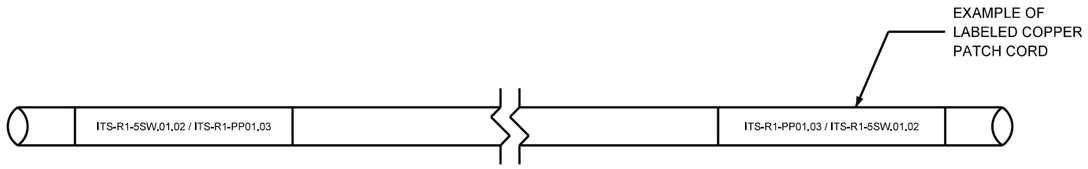

NOTES:

1. LABEL SHALL BE PLACED NO CLOSER THAN 6" FROM CONNECTION POINT.
2. LABEL SHALL BE VISIBLE / VIEWABLE FROM POINT OF FINAL RESTING ORIENTATION.
3. LABEL SHALL BE MECHANICALLY IMPRINTED, SMEAR RESISTANT, FADE RESISITANT, WRAP AROUND, SELF-LAMINATING TYPE.
4. LABEL SHALL BE BLACK PRINT ON WHITE BACKGROUND.
5. ALL LETTERS IN LABELS AND IDENTIFIERS SHALL BE CAPITAL LETTERS.

Illinois Tollway

FIGURE B-17: COPPER PATCH CORD LABELING SCHEME (DEVICE/EQUIP TO PATCH PANEL)

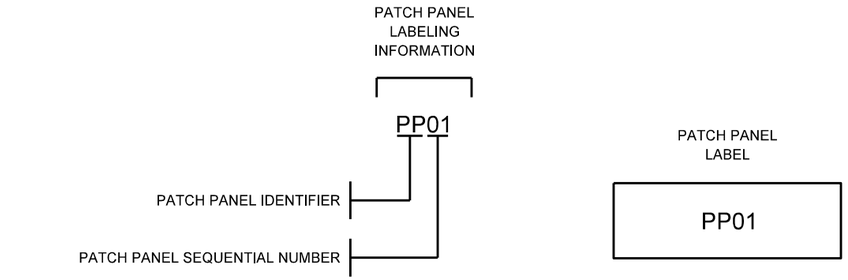

NOTES:

1. COPPER PATCH PANEL SHALL BE LABELED ON PATCH PANEL COVER ON LEFT SIDE WITH PATCH PANEL IDENTIFIER. LABEL SHALL BE CENTERED ON PATCH PANEL VERTICALLY. MULTIPLE PATCH PANELS IN CABINET/RACK SHALL BE LABELED SEQUENTIALLY. ALL PATCH PANELS SHALL BE LABELED.
2. PATCH PANEL PORTS SHALL BE LABELED WITH PORT IDENTIFIER.
3. ALL LETTERS IN LABELS AND IDENTIFIERS SHALL BE CAPITAL LETTERS.
4. PATCH PANEL AND PORT LABELS, PRE-LABELED FROM THE MANUFACTURER MAY BE USED IN LIEU OF MANUAL LABELING, AS LONG AS MANUFACTURER LABELS ARE CLEARLY VISIBLE AND DISTINGUISHIBLE BY MARKING. ETCHED MANUFACTURER LABELS, WITH NO COLOR DISTINCTION FROM THE SURFACE LABEL IS ETCHED INTO, SHALL BE LABELED OVER PER LABELING SPECIFICATIONS.

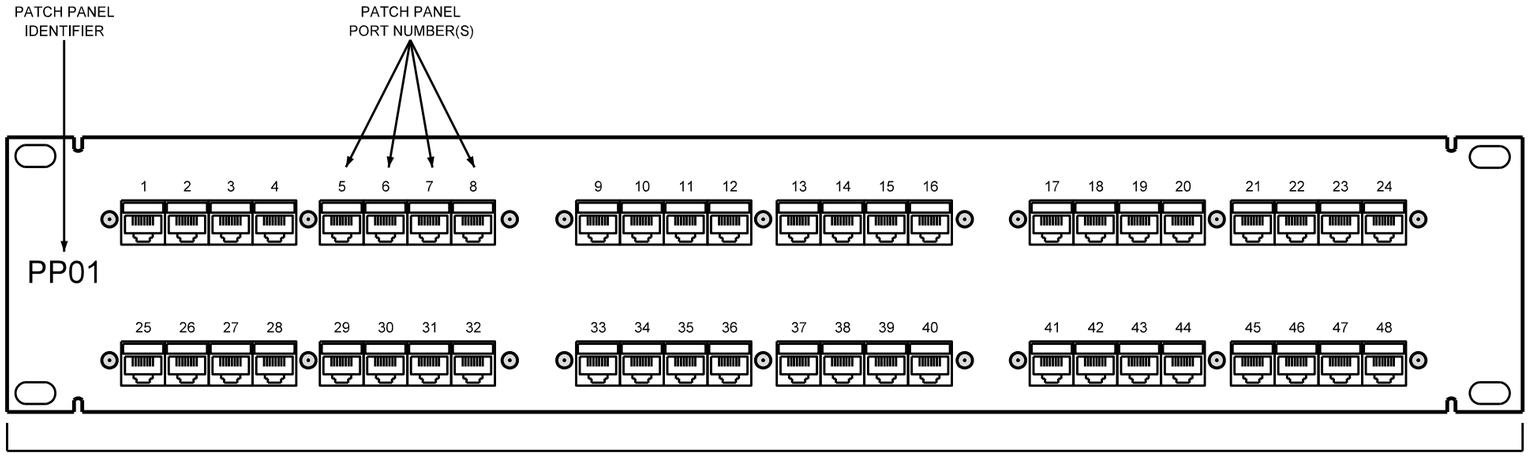

48-PORT PATCH PANEL LABELING INFORMATION - FRONT VIEW

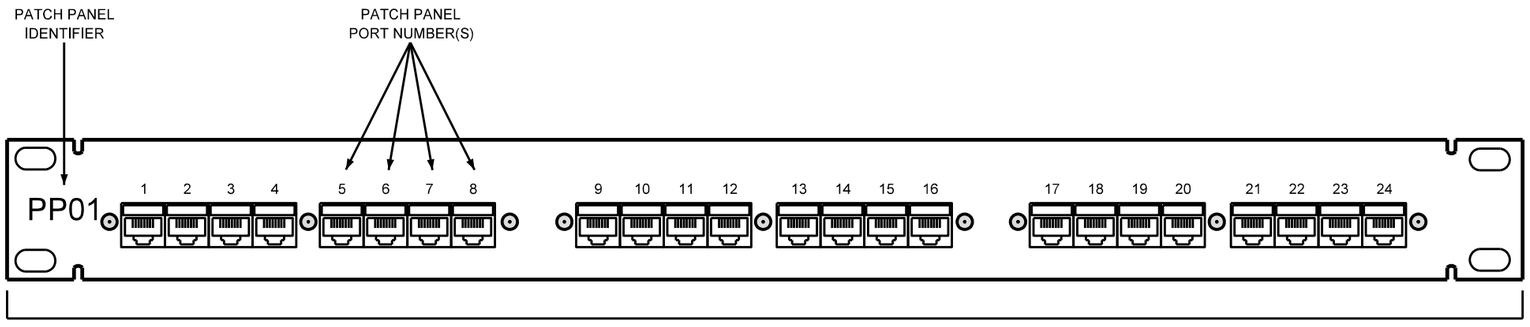

24-PORT PATCH PANEL LABELING INFORMATION - FRONT VIEW

FIGURE B-18: COPPER PATCH PANEL LABELING SCHEME

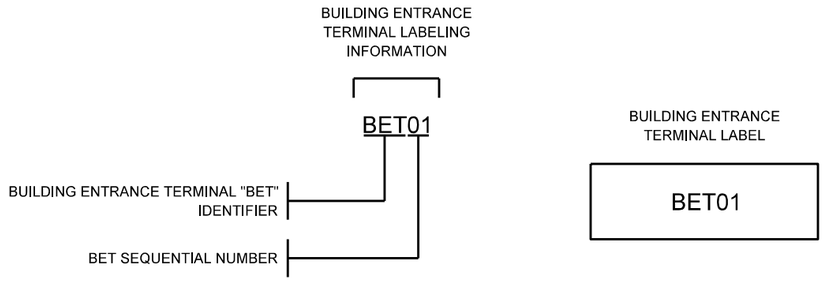

NOTES:

1. BUILDING ENTRANCE TERMINAL "BET" SHALL BE LABELED ON BET COVER WITH BET IDENTIFIER. LABEL SHALL BE PHENOLIC TAG TYPE. PHENOLIC TAG SHALL BE NO LESS THAN 2 INCHES TALL AND LABEL LETTERS/NUMBERS SHALL BE NO LESS THAN 1.5 INHES TALL. LABEL SHALL BE BLACK PRINT ON WHITE BACKGROUND. LABEL SHALL BE FASTENED TO BET COVER AND CENTERED NEAR TOP OF BET. MULTIPLE BET'S SHALL BE LABELED SEQUENTIALLY. ALL BET'S SHALL BE LABELED.
2. BET'S SHALL BE LABELED ON BET COVER WITH CABLE LABELS OF ALL CABLES TERMINATED IN THE BET. LABELS SHALL BE PHENOLIC TAG TYPE. PHENOLIC TAG SHALL BE NO LESS THAN 1 INCH TALL AND LABEL LETTERS/NUMBERS SHALL BE NO LESS THAN 1/2" TALL. LABELS SHALL BE BLACK PRINT ON WHITE BACKGROUND. LABELS SHALL BE FASTENED TO BET COVER ON LEFT SIDE OF BET. ALL CABLES TERMINATED IN BET'S SHALL BE LABELED.
3. ALL LETTERS IN LABELS AND IDENTIFIERS SHALL BE CAPITAL LETTERS.
4. INSIDE OF BET SHALL BE LABELED WITH LABEL STRIP. LABEL STRIP SHALL INDICATE FIRST TERMINATION PAIR AND EVERY FIFTH TERMINATION PAIR. FIRST LEVEL BACKBONE LABEL STRIPS SHALL BE BLACK PRINT ON WHITE BACKGROUND. SECOND LEVEL BACKBONE LABEL STRIPS SHALL BE BLACK PRINT ON GRAY BACKGROUND. LABEL STRIPS, PRE-LABELED FROM THE MANUFACTURER MAY BE USED IN LIEU OF MANUAL LABELING, AS LONG AS MANUFACTURER LABELS ARE CLEARLY VISIBLE AND DISTINGUISHABLE BY MARKING.

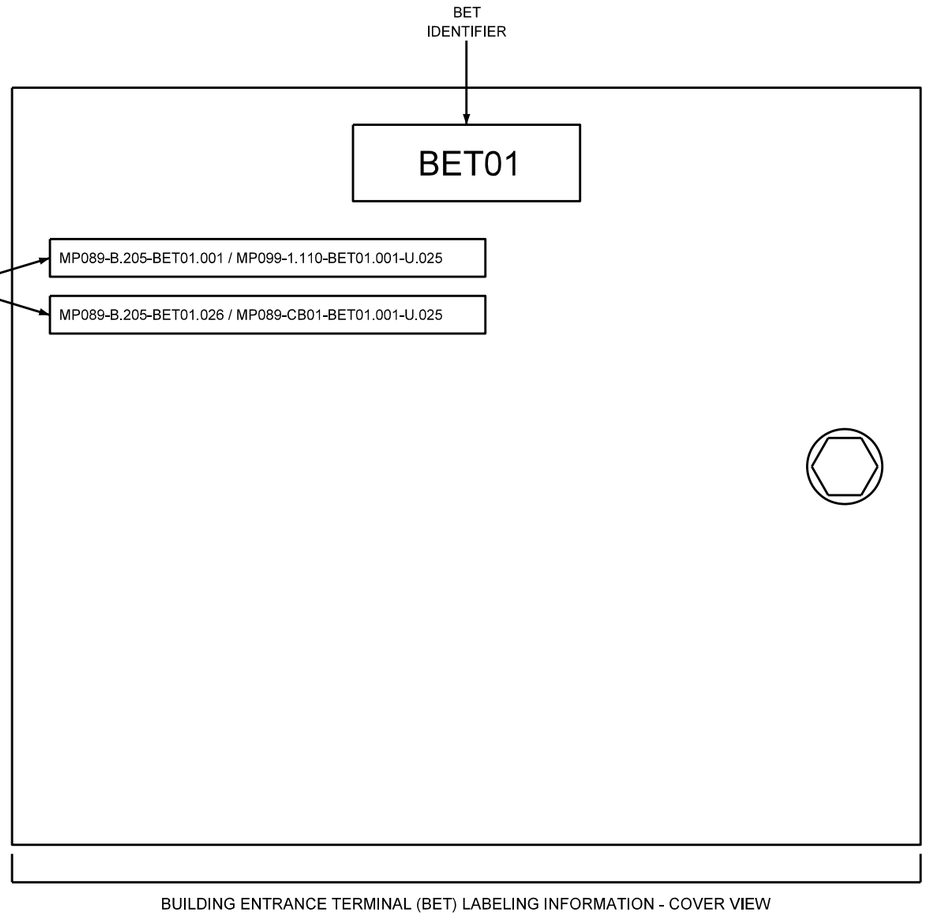

BUILDING ENTRANCE TERMINAL (BET) LABELING INFORMATION - COVER VIEW

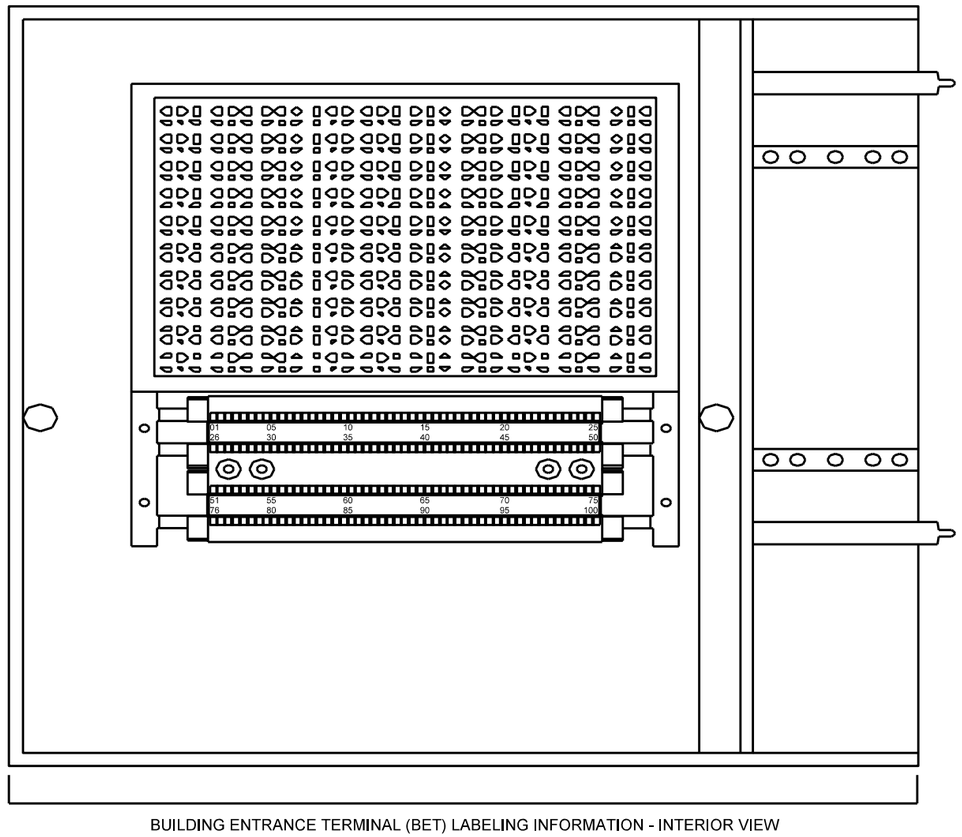

BUILDING ENTRANCE TERMINAL (BET) LABELING INFORMATION - INTERIOR VIEW

Illinois Tollway

FIGURE B-19: COPPER BUILDING ENTRANCE TERMINAL (BET) LABELING SCHEME

CAMERA
LABELING
INFORMATION

MP089.WB-CAM01

- MP089 — BUILDING TYPE IDENTIFIER
- WB — BUILDING/LOCATION IDENTIFIER
- CAM — DIRECTION OF TRAVEL
- 01 — SEQUENTIAL CAMERA NUMBER
- CAM — "CAMERA"

CAMERA LABEL

MP089.WB-CAM01

NOTES:

1. ALL DEVICES & EQUIPMENT SHALL BE LABELED.
2. LABEL SHALL BE BLACK PRINT ON WHITE BACKGROUND.
3. ALL LETTERS IN LABELS AND IDENTIFIERS SHALL BE CAPITAL LETTERS.
4. LABELS SHALL BE AFFIXED TO CAMERAS SO LABELS ARE IN VISIBLE AREA OF VIEW.
5. MULTIPLE DEVICES & EQUIPMENT SHALL BE LABELED SEQUENTIALLY.

Illinois Tollway

FIGURE B-20: DEVICE LABELING SCHEME

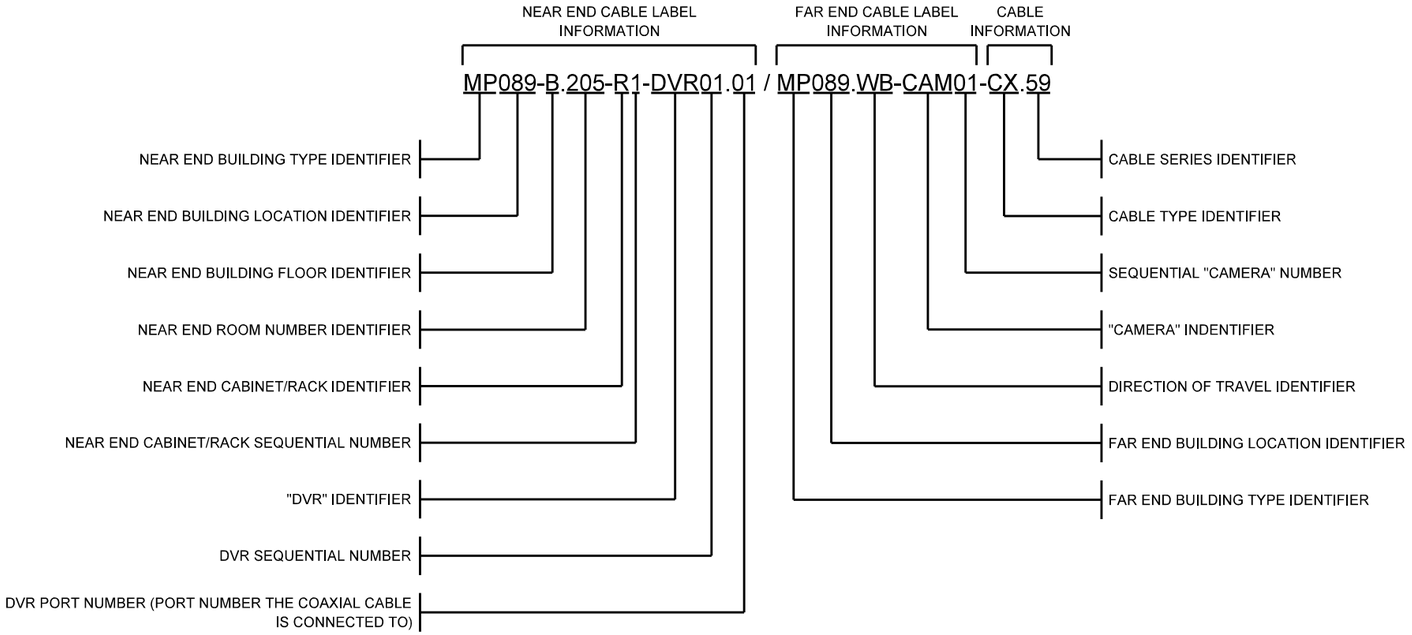

NOTES:

1. LABEL SHALL BE PLACED NO CLOSER THAN 12" FROM POINT OF CONNECTION INTO DVR OR CAMERA.
2. LABEL SHALL BE VISIBLE/VIEWABLE FROM POINT OF FINAL RESTING ORIENTATION.
3. LABEL SHALL BE MECHANICALLY IMPRINTED, SMEAR RESISTANT, FADE RESISTANT, WRAP AROUND, SELF-LAMINATING TYPE.
4. LABEL SHALL BE BLACK PRINT ON WHITE BACKGROUND.
5. LABEL SHALL BE TWO LINES OF TEXT. FIRST LINE SHALL HAVE NEAR END COMPONENT/EQUIPMENT INFORMATION. SECOND LINE SHALL HAVE FAR END COMPONENT/EQUIPMENT INFORMATION FOLLOWED BY CABLE TYPE AND CABLE SERIES.
6. ALL LETTERS IN LABELS AND IDENTIFIERS SHALL BE CAPITAL LETTERS.

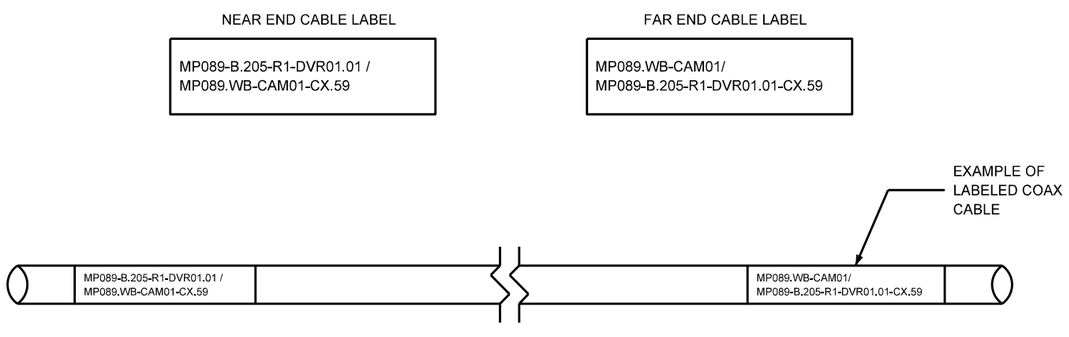

FIGURE B-21: COAXIAL DROP CABLE LABELING SCHEME

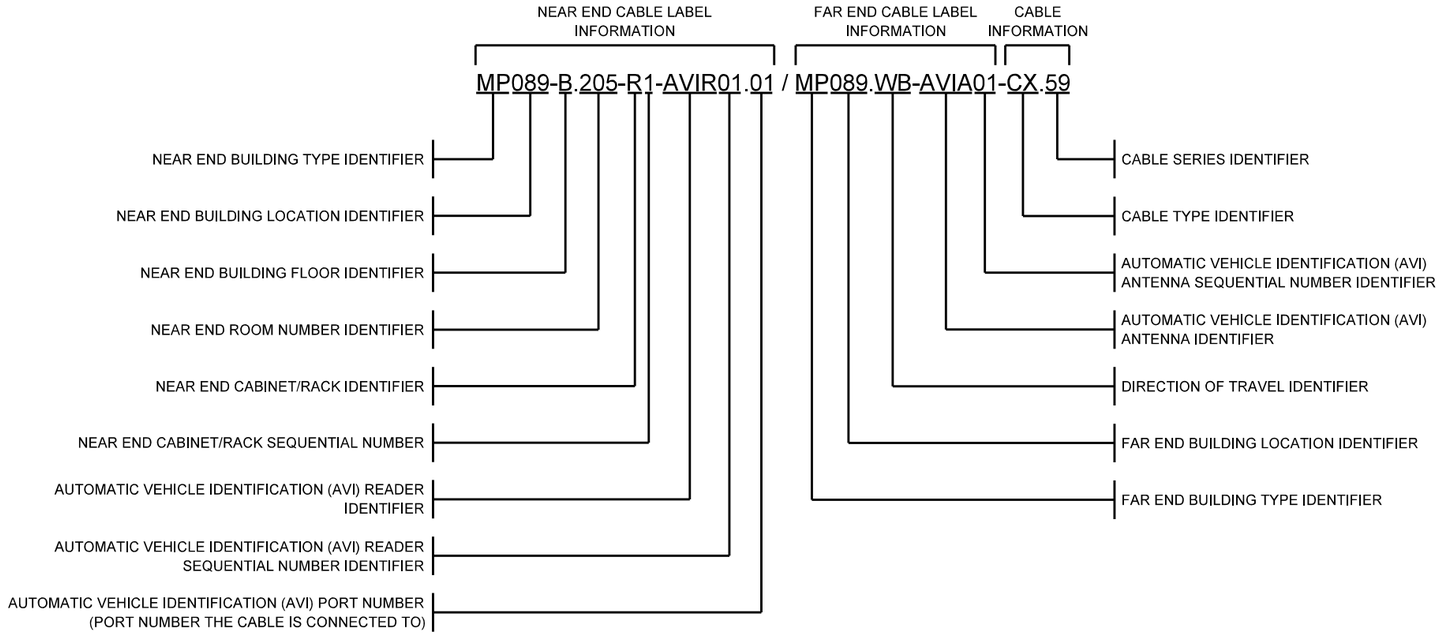

NOTES:

1. LABEL SHALL BE PLACED NO CLOSER THAN 12" FROM POINT OF CONNECTION INTO AVI CONTROLLER OR RECEIVER.
2. LABEL SHALL BE VISIBLE/VIEWABLE FROM POINT OF FINAL RESTING ORIENTATION.
3. LABEL SHALL BE MECHANICALLY IMPRINTED, SMEAR RESISTANT, FADE RESISTANT, WRAP AROUND, SELF-LAMINATING TYPE.
4. LABEL SHALL BE BLACK PRINT ON WHITE BACKGROUND.
5. LABEL SHALL BE TWO LINES OF TEXT. FIRST LINE SHALL HAVE NEAR END COMPONENT/EQUIPMENT INFORMATION. SECOND LINE SHALL HAVE FAR END COMPONENT/EQUIPMENT INFORMATION FOLLOWED BY CABLE TYPE AND CABLE SERIES.
6. ALL LETTERS IN LABELS AND IDENTIFIERS SHALL BE CAPITAL LETTERS.

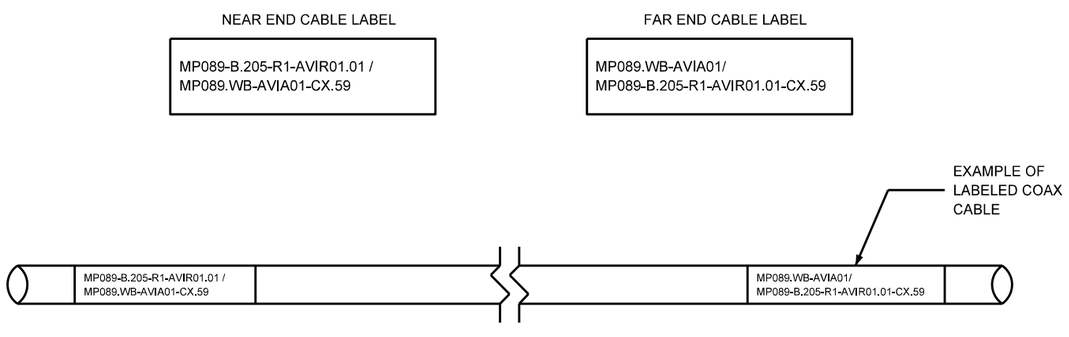

Illinois Tollway

FIGURE B-22: AVI DROP CABLE LABELING SCHEME

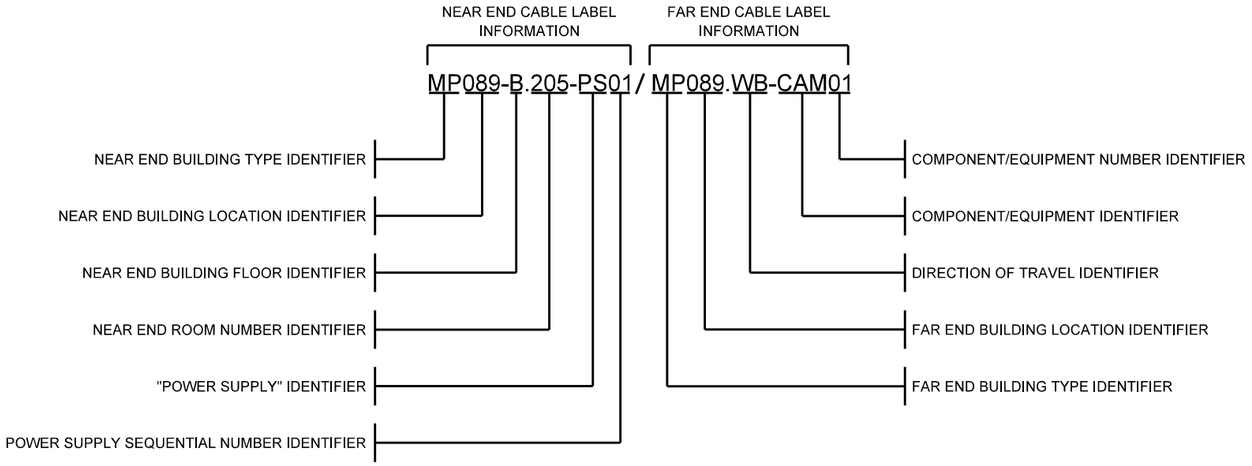

NOTES:

1. LABEL SHALL BE PLACE NO CLOSER THAN 12" FROM POINT OF CONNECTION INTO POWER SUPPLY OR EQUIPMENT POWERED.
2. LABEL SHALL BE VISIBLE/VIEWABLE FROM POINT OF FINAL RESTING ORIENTATION.
3. LABEL SHALL BE MECHANICALLY IMPRINTED, SMEAR RESISTANT, FADE RESISTANT, WRAP AROUND, SELF-LAMINATING TYPE.
4. LABEL SHALL BE BLACK PRINT ON WHITE BACKGROUND.
5. LABEL SHALL BE TWO LINES OF TEXT. FIRST LINE SHALL HAVE NEAR END COMPONENT/EQUIPMENT INFORMATION. SECOND LINE SHALL HAVE FAR END COMPONENT/EQUIPMENT INFORMATION FOLLOWED BY CABLE TYPE AND CABLE SERIES.
6. ALL LETTERS IN LABELS AND IDENTIFIERS SHALL BE CAPITAL LETTERS.

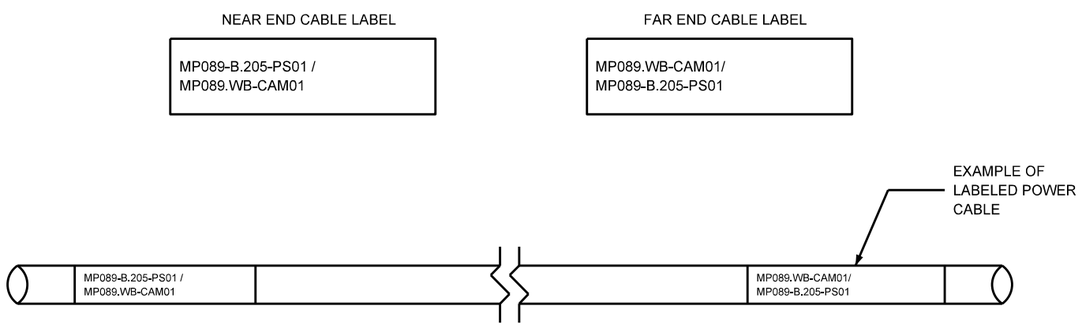

FIGURE B-23: POWER CABLE LABELING SCHEME

APPENDIX B

ITS LABELING IDENTIFIERS

SPACE IDENTIFIERS										CABLE & TERMINATION IDENTIFIERS				DEVICE / EQUIP IDENTIFIERS	
Building						Inside Space (Room)		Outside Space (Field Site)		Rack, Termination, Grounding		Cabling		Device / Equipment	
MP			009			B.205, 1.110		HHE120, CAB001, BET01			ITS-C1, ITS-R1-AA.01, PP01		SM.024, U.25, BET01.026		5SW.01, 4SW.01.03
	A		B		C		D	or	E		G		H		F
ID #	Building Type ID	ID #	Building Location ID	ID #	Building Location ID	ID #	Room Floor ID	ID #	Site ID	ID #	Cabinet/Rack ID	ID #	Cable Type ID	ID #	Comm / Network Device ID
			Plazas (ML / Ramps)		Plazas (ML / Ramps)										
XR	Exit Ramp Plaza (Off-Ramp)	001	South Beloit	077	Roosevelt	R	Roof Level	HHC	Handhole (Communications)	"R" ##	Rack # Designator (1 - 0N)	SM	SM Fiber (Backbone or Drop)	1SW	2955C Switch
ER	Entrance Ramp Plaza (On-Ramp)	002	East Riverside Boulevard	079	Butterfield	3	Walkway Level or 3rd Floor	HHE	Handhole (Electrical)	"C" ##	Cabinet # Designator (1 - 0N)	MM	MM Fiber (Backbone or Drop)	2SW	2955S Switch
MP	Mainline (ML) Plaza	003	Genoa Road	081	Ogden Ave.	2	Canopy Level or 2nd Floor	CAB	Field Cabinet (Enclosure)	"PP" ##	Copper Patch Panel (01-0N)	U	Copper Cable	3SW	3000 Switch
TB	Tower Building / Cabinet	004	IL Route 173	083	Maple Road	1	Plaza/Ground Level or 1st Floor	BET	Building Entrance Terminal			CX	Coax Cable	4SW	3560 Switch
MY	Maintenance Yard	05A	Irene Road	085	63rd St.	B	Basement Level				Cabinet/Rack System/Owner			5SW	3750 Switch
OA	Oasis	005	Belvidere	087	75th St.					ITS	Primary ITS App Rack		Cable Designator ID	6SW	Other
		006	IL Route 47	089	Boughton Road Mainline									7SW	3850 Switch
CA	Central Administration	007	Marengo-Hampshire	090	Boughton Road Ramp									SN1	Sonet Node 1 (Cisco ONS 15454)
ML	Mainline	008	Randall Road	093	127th St.		Room Number ID		Site ID Number		Termination Shelf ID	001 - 00N	Fiber Count Designator	SN2	Sonet Node 2 (Intelect SonetLynx)
RP	Ramp	009	Elgin (Plaza 9)	095	Archer Ave.					A - M	Shelf Designator		(XYZ = total strands)	ENC	Video Encoder
		010	Barrington Road	097	IL Route 7	XXX	Room Number	001 - 00N	Site Numbering					DEC	Video Decoder
		011	IL Route 31	099	Spring Creek						Termination Panel ID		or	FVT	Fiber Video Transmit (IFS Mod)
		012	Roselle Road	101	IL Route 6					A -M	Panel Designator			FVR	Fiber Video Receive (IFS Mod)
		013	IL Route 25	065	Peace Road								Copper Pair Count / Terminated On	FDM	Fiber Data Mux (IFS Mod)
		014	IL Route 59	066	Dekalb-West						Port Number ID	001-00N	(XYZ = pair count)	DVR	Digital Video Recoder
		015	IL Route 53	067	Annie Glidden					01 - 0N	Port # Designator			NVR	Network Video Recorder
		16A	IL Route 59	069	Dixon								or		
		16B	Beverly	070	IL Route 26					GROUNDING & BONDING IDENTIFIERS					
		017	Devon Avenue	071	M-11								Coaxial Cable Series #		Other Devices
		018	Arlington Heights Road	073	Army Trail Road						TMGB-01, ITS-R1-BC.06	01-0N	(XY = series #)		
		019	River Road	075	North Avenue									CAM	Camera
		020	Buckley Road	077	Roosevelt Road					ID #	Ground Busbar Type ID			AVI	Automatic Vehicle Identification
		021	Waukegan	079	Butterfield Road									DMS	Dynamic Message Sign
		022	IL Route 60	081	Ogden Avenue					TMGB	Telecom Main Ground Busbar			WIM	Weigh-in-Motion
		023	Half Day Road	083	Maple Avenue					TGB	Telecom Ground Busbar			VDS	Vehicle Detector Station
		024	Edens Spur	085	63rd Street									RQD	Ramp Queue Detector
		026	Lake Cook Road	087	75th Street						Ground Busbar Number ID			RWIS	Roadway Weather Information System
		027	Willow Road	089	Boughton Road									PS	Power Supply
		028	Golf Road	090	Boughton Road					01 - 0N	Ground Busbar # Designator				
		029	Touhy Avenue	093	127th Street										
		031	O'Hare West	095	Archer Avenue (143rd Street)						Bonding Conductor ID				Direction of Travel
		032	O'Hare East	097	IL Route 7 (159th Street)										
		033	Irving Park Road	099	Spring Creek Plaza					"BC"	Bonding Conductor			NB	Northbound
		034	75th	101	US Route 6									SB	Southbound
		035	Cermak Road (22nd Street)		Tower Locations						Bonding Conductor Wire Size			WB	Westbound
		036	82nd Street	180	Lisle									EB	Eastbound
		037	I-55 Stevenson Expressway	181	Willow					XX	Conductor Wire Size (AWG)				
		038	US 12-20 95th Street	182	Rochelle										Device Number
		039	83rd Street	183	Ashton										
		040	US 6, 159th Street	184	Dixon					Terminal Panel Board				01 - 0N	Device #
		041	163rd Street	185	Western Springs										
		042	I-57		Oasis Locations						TPB-01				Equip Port Number ID
		043	I-80 Westbound	190	Lincoln										
		045	I-80 Eastbound	191	Hinsdale					ID #	Terminal Panel Board ID			01 - 0N	Equip Port # Designator
		047	Halsted Street	192	O'Hare										
		051	York Road	193	Lake Forest					TPB	Terminal Panel Board ID				
		052	Myers Road	194	Des Plaines					XX	Terminal Number (01 - 0N)				
		053	Spring Road (22nd Street)	195	Belvidere										
		054	IL Route 83	196	Dekalb										
		055	Midwest Road		Other Locations										
		056	Highland Avenue	201	Maintenance Yard 1										
		057	Naperville Road	202	Maintenance Yard 2										
		058	Winfield Road	203	Maintenance Yard 3										
		059	Farnsworth Avenue	204	Maintenance Yard 4										
		060	Eola Road	205	Maintenance Yard 5										
		061	Aurora	206	Maintenance Yard 6										
		063	IL Route 31	207	Maintenance Yard 7										
		064	Orchard Road	208	Maintenance Yard 8										
		065	Peace Road	209	Maintenance Yard 9										
		066	DeKalb	210	Maintenance Yard 10										
		067	Annie Glidden Road	211	Maintenance Yard 11										
		069	Dixon	212	Maintenance Yard 12										
		073	Army Trail	230	Central Administration										
		075	North Ave.												