# Illinois Tollway M-ITS Base Sheet Revisions

| Section M | Base Sheet Drawings | |
|---|---|---|
| | **Drawing** | **Modification Summary** **Effective: 2021-03-01** |
| | | New Sheet ☒ Retired Standard |
| | **Pole Assembly (ITS)-Series 1000** | |
| | **M-ITS-1000** | **Elevation Views Pole Mounted ITS Element Assembly** |
| | | . Sheet 1of3: Added title for one section detail; Added note on wires from solar panels to battery box then to ITS enclosure then Cat6 cables to ITS devices installed on the ITS pole<br>. Sheet 2of3: Added title for ITS Disconnect Switch Cast-in place<br>. Sheet 3of3: Added new assembly detail for ITS Disconnect Switch Pre-cast (simplified installation) |
| | **M-ITS-1001** | **General Notes Pole Mounted ITS Element Assembly** |
| | | . Added Note 22.: Cables shall enter poles through a gromet. Gromet size shall be chosen so that the center hole forms a water tight seal around the cables |
| | | |
| | **Dynamic Message Sign (ITS)-Series 1100** | |
| | **M-ITS-1103** | **DMS Front Access-Cantilever Electrical Plan** |
| | | . Revised assembly details for DMS Type 2 Cantilever pushed further away so the edge of the DMS clears Lane 1 |
| | **M-ITS-1104** | **DMS Front Access-Butterfly Electrical Plan** |
| | | . Revised asembly details for DMS Butterfly Type 2 Front Access pushed further away to the edge of the DMS clears Lane 1 |
| | | |
| | **Cabinet Wiring (ITS)-Series 1200** | |
| | **M-ITS-1200 to M-ITS-1213** | **M-ITS-1200: Cabinet Layout and Wirring ITS Pole Mounted Enclosure (1-MVDS)**<br>**M-ITS-1201: Cabinet Layout and Wirring ITS Pole Mounted Enclosure (2-MVDS)**<br>**M-ITS-1202: Cabinet Layout and Wirring ITS Pole Mounted Enclosure (3-MVDS)**<br>**M-ITS-1203: Cabinet Layout and Wirring ITS Pole Mounted Enclosure (1-CCTV camera)**<br>**M-ITS-1204: Cabinet Layout and Wiring ITS Pole Mounted Enclosure (1-CCTV and 1-MVDS)**<br>**M-ITS-1205: Cabinet Layout and Wiring ITS Pole Mounted Enclosure (1-CCTV camera and 2-MVDS)**<br>**M-ITS-1206: Cabinet Layout and Wiring ITS Pole Mounted Enclosure (1-CCTV and 3-MVDS)**<br>**M-ITS-1207: Cabinet Layout and Wiring ITS Pole Mounted Enclosure (2-CCTV cameras)**<br>**M-ITS-1208: Canenet Layout and Wiring ITS Pole Mounted Enclosure (2-CCTV Cameras and 1-MVDS)**<br>**M-ITS-1209: Cabinet Layout and Wiring ITS Pole Mounted Enclosure (2-CCTV cameras and 2-MVDS)**<br>**M-ITS-1210: Cabinet Layout and Wiring ITS Pole Mounted Enclosure (2-CCTV cameras and 3-MVDS)**<br>**M-ITS-1211: Cabinet Layout and Wiring ITS Pole Mounted Enclosure (1-MVDS) Solar Generator and FOC**<br>**M-ITS-1212: Cabinet Layout and Wiring ITS Pole Mounted Enclosure (2-MVDS) Solar Generator and FOC**<br>**M-ITS-1213: Cabinet Layout and Wiring ITS Pole Mounted Enclosure (3-MVDS) Solar Generator and FOC** |
| | | . Revised to show the fiber optic conduit and power conduit interface with the ITS Enclosure for location and size<br>. Added Note 13: Fiber cable shall run straight down from the Gator patch through the left most conduit. Power cable shall be pulled through the conduit to the right of the fiber conduit. No slack shall be placed in the cabinet, slack shall be put in power and fiber optic handholes<br>. Revised layout to remove Cohu Surge Suppressor Part AS<br>. Revised details for Part V to remove dash line for DITEK surge suppressor<br>. Revised description for Item V to remove Cohu camera<br>. Revised Item AQ to remove reference to Cohu PoE power injector<br>. Remove Item AS for Cohu PoE injector not required anymore<br>. Revised Note 4: to say Not used |
| | **M-ITS-1217** | Cabinet Wiring Diagram In Pavement Detection System AP, PoE and Injector ITS Assembly |
| | | . Revised to show the fiber optic conduit and power conduit interface with the ITS Enclosure for location and size<br>. Added Note 13: Fiber cable shall run straight down from the Gator patch through the left most conduit. Power cable shall be pulled through the conduit to the right of the fiber conduit. No slack shall be placed in the cabinet, slack shall be put in power and fiber optic handholes<br>. Added Note to Designer: The DSE shall specify the Gator Patch length per site |
| | | |
| | **Roadway Weather Information System (ITS)-Series 1300** | |
| | **M-ITS-1300** | **RWIS Pole, Sensor Mounting Detail** |
| | | . Added Note 8: Wind sensor can be installed on the secondary pole it primary pole is close to tree line<br>. Added Note 9: All cables installed in a pole shall use a grommet to connect to ITS device installed on the pole |
| | **M-ITS-1302** | **Typical RWIS Site Installation Plan** |
| | | . Added Note 5: Note to Designer: In the event the Primary and Secondary poles cannot be installed within the 40 foot maximum radius of the bridge deck, the DSE shall consult with the Tollway and GEC on an alternate placement solution<br>. Added Note 6: Note to Designer: Installation of the Primary and Secondary pole for bridge installation: pole to be installed near immediate entrance of the bridge so non-invasive laser temperature sensor can monitor bridge deck temperature and bridge approach temperature |
| | | |

**Illinois Tollway Base Sheet Revisions**

| Section M | Base Sheet Drawings | |
|---|---|---|
| | **Drawing** | **Modification Summary** **Effective: 2020-03-01** |
| | | |
| | **Solar Powered Generator (ITS)-Series 1400** | |
| | **M-ITS-1400** | **Solar Power Generator Details** |
| | | . Added Note to Designer: The simplified solar power arrangement shall only be used for a maximum of 3 MVDS. For all other arrangments use the 1400 Series |
| | | |
| | **Tower Mounted CCTV (ITS)-Series 1500** | |
| | **M-ITS-1500** | **ITS Details Tower Mount Camera Details** |
| | | . Added note to Designer: The 2 CCTV shall be placed on the leg facing the roadway with a clear field of view<br>. Added Note 23: The CCTV cameras shall be mounted on the same tower leg with an Axis T92B62 mounting arm with T94A01D pendant kit, or equivalent as approved by the engineer. There will be 24in vertical spacing between the cameras |
| | **M-ITS-1503** | . Removed details for Part AS: removed PoE power injector<br>. Remove Item AS: removed reference to Cohu PoE injector |
| | | |
| | **Flashing Sign Beacon (ITS)-Series 1700** | |
| | **M-ITS-1700** | **Flashing Sign Beacon Installation Breakaway Electrical Detail** |
| | | . Added details for power cable disconnect box Breakaway<br>. Added details for the 4 flashing lights installed on the static sign with flashing sequence and light mounting details onto the sign<br>. Added Note 1: see plans for required conductor sizes<br>. Added Note 2: All three conductors shall be in one harness<br>. Added Note 3: As an alternative to the conduit body on fondation, use thermoplastic junction boxes<br>. Added Note 4: Slack in line side cable shall be provided in handhole<br>. Added Note to Designer: Install new CCTV within 500 feet upstream of the static beacon sign<br>. Added note to Designer: If an existing ITS enclosure lies within the immediate proximity of the flashing sign then power can be connected to that enclosure, otherwise install a new ITS enclosure near the flashing sign |
| | **M-ITS-1701** | **Cabinet Layout and Wiring ITS Pole Mounted Enclosure** |
| | | . Added wires for second pair of flashing lights and connection to the circuit breakers<br>. Added Item AT: ELTEC FS-4 DC Flasher<br>. Added Item AU: 9 PIN Harness for FS-4<br>. Rved dashline for DITEK surge supressor for Cohu camera<br>. Revised Item V: removed reference to DITEK for Cohu camera<br>. Revised Item AS to say N/A |
| | | |
| | **IPDC Facility (ITS)-Series 1800** | |
| | **M-ITS-1815** | **IPDC and Combination Plaza/IPDC Concrete Foundation** |
| | | . Added new sheet for IPDC and Combination Plaza/IPDC Concrete Foundation details |
| | | |
| | **Conduit Details at Integral Abutment Bridge (ITS)-Series 1900** | |
| | **M-ITS-1900** | **Conduit Details at Integral Abutment Bridge with MSE Wall (Sheet 3)** |
| | | . Added material type for ITS conduit attached to bridge: PVC coated steel or FRE conduit per plan |
| | | |
| | **100 FT. Monopole (ITS)-Series 2000** | |
| | **M-ITS-2000** | **100 FT. Monopole Closed Circuit Television (CCTV) Camera Tower** |
| | | . Sheet 1of4: Added details for ITS and support for ITS Enclosure foundation: 16" Dia. X 4' @ 3000PSI Circular Concrete Foundation<br>. Sheet 4of4: Added details to install the ITS Enclosure and ITS Disconnect Switch onto the concrete slab of 100 foot monotube |
| | | |
| | **Video Power Junction Box (ITS)-Series 2100** | |
| | **M-ITS-2100** | **Video Power Junction Box Model A: 4 PoE CCTV arrangment without communication switch** |
| | | . New drawing created to standardize Video Power Junction Box arrangment - Without Cisco switch when the box is installed and can use Cat 6 cables when distance is less than 300 feet from Plaza Communication room |
| | **M-ITS-2101** | **Video Power Junction Box Model B: 4 PoE CCTV arrangment Cosco 4000 switch** |
| | | . New drawing created to standardize Video Power Junction Box arrangment - With Cisco 4000 switch when the box is installed at a distance greater than 300 feet from the Cisco switch in the Plaza Communication Room |
| | | |

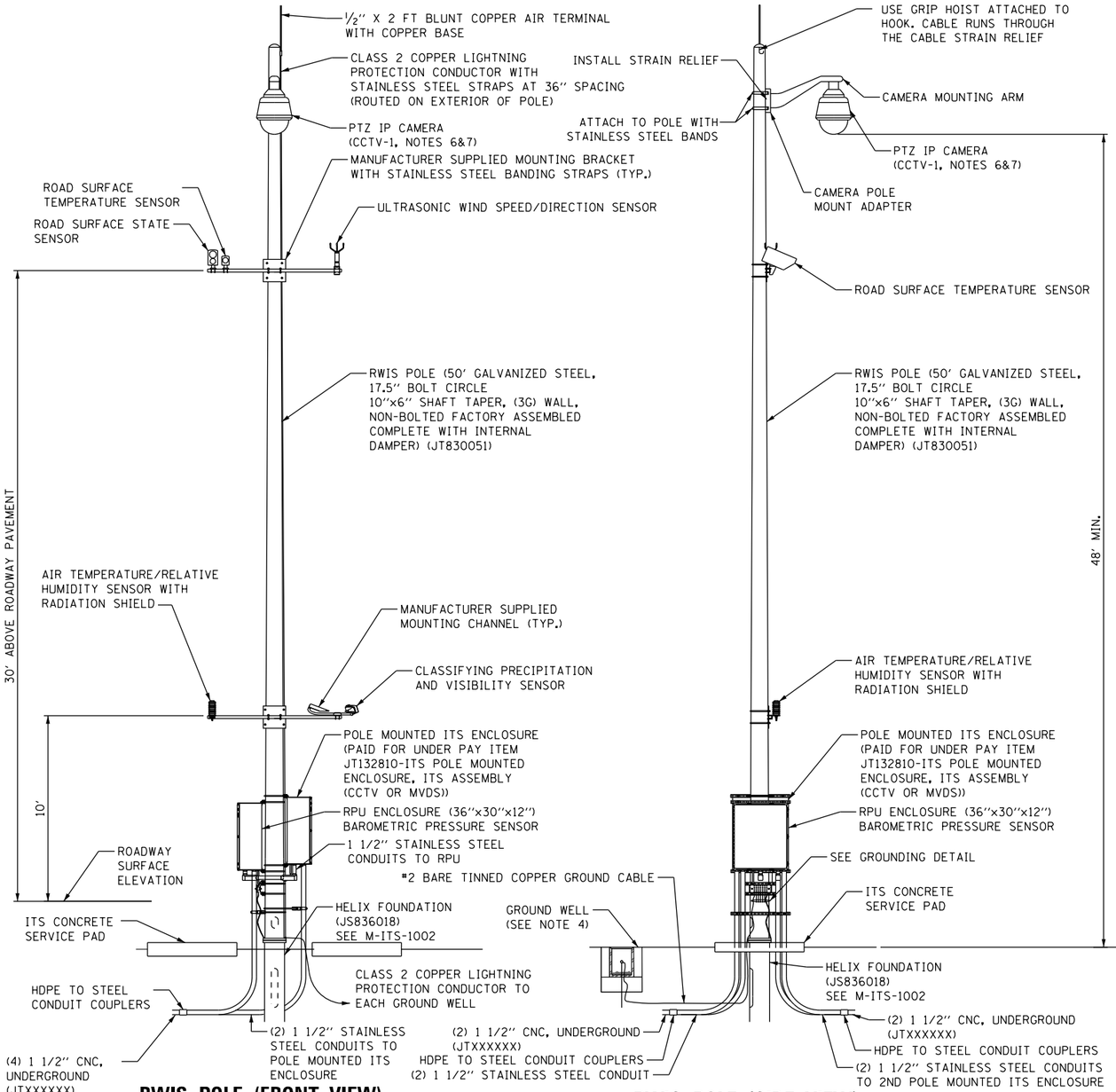


**RWIS POLE (FRONT VIEW) – PRIMARY POLE**

NOT TO SCALE

**RWIS POLE (SIDE VIEW) – PRIMARY POLE**

NOT TO SCALE

**RWIS POLE (FRONT VIEW) – REMOTE SENSOR POLE**

NOT TO SCALE

**RWIS POLE (SIDE VIEW) – REMOTE SENSOR POLE**

NOT TO SCALE

NOTES:

1. ALL ITEMS ON THIS SHEET ARE INCLUDED IN PAY ITEM "ROADWAY WEATHER INFORMATION SYSTEM" (JT131142) UNLESS NOTED OTHERWISE.
2. SEE M-ITS-1302 FOR RPU ENCLOSURE, REMOTE SENSOR ENCLOSURE, AND CONDUIT INSTALLATION DETAILS.
3. SENSORS MOUNTED ON RWIS POLES SHALL HAVE THEIR CABLING ROUTED INSIDE THE POLE.
4. ONLY ONE GROUND WELL SHOWN FOR CLARITY. INSTALL 3 GROUND RODS IN A TRIAD CONFIGURATION ON PRIMARY POLE.
5. RWIS MANUFACTURER TO SUPERVISE INSTALLATION PROCESS.
6. INSTALL CCTV CAMERA ON MAIN RWIS POLE.
7. FINAL PLACEMENT HEIGHTS OF THE CCTV CAMERAS SHALL BE BASED ON SITE CONDITIONS, ILLINOIS TOLLWAY OPERATIONAL NEEDS, AND AS PER MANUFACTURER'S MOUNTING RECOMMENDATIONS. THE HEIGHT SHALL BE APPROVED BY THE ENGINEER ONLY AFTER REVIEW BY ILLINOIS TOLLWAY ITS OPERATIONS.
8. WIND SENSOR CAN BE INSTALLED ON THE SECONDARY POLE IF PRIMARY POLE CLOSE TO TREE LINE.
9. ALL CABLES INSTALLED IN A POLE SHALL USE A GROMMET.

## NOTE TO DESIGNER

THIS BASE SHEET SHOWS TYPICAL NEW CONSTRUCTION BUT IT IS NOT A STANDARD DRAWING. IT REQUIRES COMPLETION BY THE DESIGNER PRIOR TO INSERTION INTO A CONTRACT. MICROSTATION FILES AND THE "CADD STANDARDS MANUAL" ARE AVAILABLE ON THE ILLINOIS TOLLWAY WEBSITE. THE DESIGNER SHALL ACCEPT THE RESPONSIBILITY OF THE DESIGN OF THIS SHEET UPON ITS INSERTION INTO A CONTRACT. ALL "NOTE TO DESIGNER" BOXES SHALL BE REMOVED PRIOR TO INSERTION OF THE SHEET INTO THE PLAN SET.

ANY MODIFICATIONS TO THIS DRAWING MUST BE ILLUSTRATED WITH A CHANGE CLOUD AND THE ILLINOIS TOLLWAY MUST APPROVE OF ANY CHANGES PRIOR TO THE DRAWING BECOMING FINAL. CHANGES TO THE MASTER REFERENCE DRAWING ARE PROHIBITED.

## NOTE TO DESIGNER

THE FOUNDATION SHOWN HERE IS FOR SURFACES AT 6:1 OR FLATTER. THE DESIGNER SHALL USE THE FOUNDATION PAY ITEM JT836020 FOR FOUNDATION AT STEEPER SLOPES.

## NOTE TO DESIGNER

IF THERE IS A ROADWAY CCTV CAMERA WITHIN 500' OF THE RWIS SITE THE DESIGNER SHALL REMOVE THE CCTV CAMERA FROM THESE BASE SHEETS AND ASSOCIATED NOTES 6 AND 7.



Illinois Tollway

RWIS POLE, SENSOR MOUNTING DETAIL

DATE
3-01-2021

## GENERAL NOTES:

1. RWIS POLES SHIELDED BY GUARDRAIL SHALL BE LOCATED A MINIMUM OF 5' BEHIND THE GUARDRAIL POST. SEE ILLINOIS TOLLWAY GUARDRAIL STANDARD (SECTION C OF STANDARDS) FOR MORE INFORMATION. ALL OTHER POLES SHALL BE LOCATED OUTSIDE THE CLEAR ZONE. FINAL LOCATION TO BE APPROVED BY THE ENGINEER.

2. ANY GROUND CABLES ROUTED INSIDE THE ENCLOSURE SHALL BE GREEN INSULATED TYPE RHW CONDUCTORS. ANY GROUND CONDUCTORS THAT ARE BURIED SHALL BE BARE COPPER TINNED. ANY GROUND CONNECTED TO THE EXTERNAL GROUND BUSBAR SHALL BE EXOTHERMICALLY WELDED TO THE BUSBAR.

3. PROVIDE A 1½'' STAINLESS STEEL CONDUIT NIPPLE WITH LB FITTING FOR ROUTING ITS ELEMENT CABLES INSIDE THE POLE TO THE EQUIPMENT ENCLOSURE. DRILL AND TAP POLE FOR THE CONDUIT NIPPLE. CABLE SLACK SHALL BE PULLED AND FASTENED WITHIN THE TOP OF THE POLE. PROPER CABLE STRAIN RELIEF SHALL BE INSTALLED AND APPROVED BY THE ENGINEER. ALL CABLE RUN INSIDE THE POLE SHALL NOT HANG BELOW THE TOP OF THE HANDHOLE COVER ON THE POLE.

4. ALL CONDUITS ENTERING THE ENCLOSURE SHALL BE SEALED. SEE ''ITS POLE MOUNTED ENCLOSURE, ITS ASSEMBLY (CCTV OR MVDS)'' SPECIAL PROVISION FOR MORE DETAIL FOR RODENT PROTECTION.

5. CONTRACTOR TO PROVIDE ALL POWER, COMMUNICATIONS AND GROUND WIRING REQUIRED FOR SYSTEM OPERATION.

6. ATTACH PVC SCH 80 CONDUIT TO ENCLOSURE FOR SUPPORT. USE METAL BUSHING WHEN CONNECTING PVC TO CABINET. USE GROMMETS AT BOTH ENDS OF CONDUIT TO SEAL CONDUIT TO PREVENT RODENTS AND INSECTS FROM ENTERING, BUT ALLOW GROUND CABLE TO RUN THROUGH BOTH ENDS.

7. GROUND RODS SHALL BE PLACED A MINIMUM OF 10' FROM THE FOUNDATION. A GROUND WELL SHALL BE INCLUDED TO PERMIT ACCESS TO THE GROUND ROD CONNECTION. CONNECTION TO THE GROUND BUSBAR AND THE GROUND ROD SHALL BE EXOTHERMICALLY WELDED.

8. A FLAT STEEL MESH PANEL ALONG WITH A COMMERCIALLY AVAILABLE HYDROPHOBIC LOW DENSITY COMPOSITE BACKFILL MATERIAL (KNOWN AS Q-SET 250) SHALL BE INSTALLED BETWEEN THE ANCHOR BASE AND THE POLE TO PREVENT THE ENTRY OF RODENTS INTO THE POLE. SEE SPECIAL PROVISIONS FOR MORE DETAILS.

9. BACKFILL PER ILLINOIS TOLLWAY STANDARD H1. BACKFILL SHALL BE TO THE TOP OF THE POLE BASE ON ALL SIDES.

10. ALL CABLING (INCLUDING CABLING INSIDE THE ENCLOSURE) SHALL BE OUTDOOR RATED.

11. INSTALL CONCRETE SERVICE PAD(S) 6 INCHES FROM THE POLE BASE ON THE SAME SIDE AS THE RPU AND ITS CABINET, IF PRESENT, CENTERED ON THE RPU AND/OR ITS ENCLOSURE.

12. THIRTY DAYS PRIOR TO INSTALLING ANY SENSORS, THE CONTRACTOR SHALL COORDINATE DEVICE CONFIGURATION WITH THE ENGINEER.

13. THE DISCONNECT SWITCH, SUPPORT, AND ASSOCIATED CONDUIT SHALL BE INSTALLED FOR RWIS SITES WHERE THE UTILITY SERVICE INSTALLATION IS GREATER THAN 500 FEET FROM THE RPU ENCLOSURE OR LOCATED ON THE OPPOSITE SIDE OF THE ROADWAY FROM THE RPU ENCLOSURE.

14. ALL SLOPE RATIOS ARE EXPRESSED AS UNITS OF VERTICAL DISPLACEMENT TO UNITS OF HORIZONTAL DISPLACEMENT (V:H).

15. FINAL PLACEMENT HEIGHTS OF THE SENSORS SHALL BE BASED ON SITE CONDITIONS, ILLINOIS TOLLWAY OPERATIONAL NEEDS, AND AS PER MANUFACTURER'S MOUNTING RECOMMENDATIONS. THE HEIGHT SHALL BE APPROVED BY THE ENGINEER ONLY AFTER REVIEW BY ILLINOIS TOLLWAY ITS OPERATIONS.

16. THE CONTRACTOR SHALL ENGAGE THE RWIS MANUFACTURER TO BE PRESENT ON SITE DURING THE INSTALLATION AND COMMISSIONING OF ALL RWIS EQUIPMENT, INCLUDING RWIS PRIMARY AND SECONDARY POLES AND ALL RWIS SENSORS AND CABINET EQUIPMENT. THE SITE ACCEPTANCE MUST BE SIGNED BY THE RWIS MANUFACTURER PRIOR TO SITE ACCEPTANCE BY THE TOLLWAY/GEC ITS UNIT.

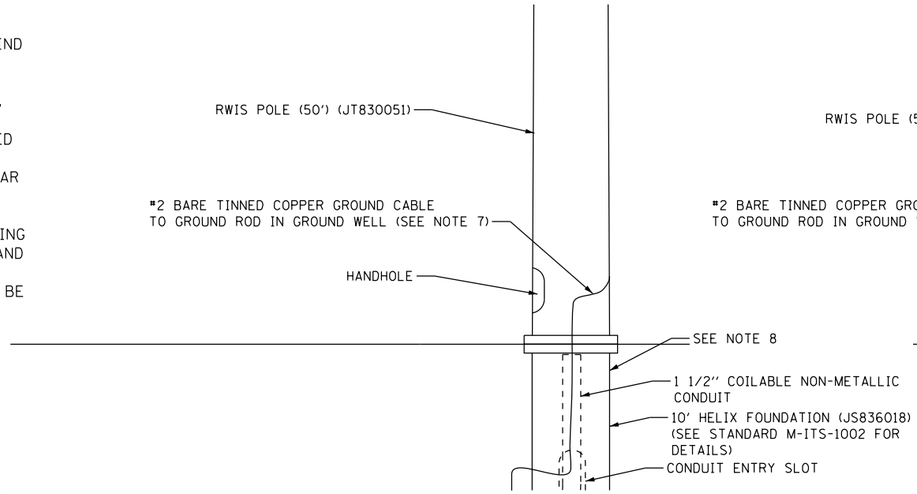


REMOTE SENSOR POLE - FRONT VIEW

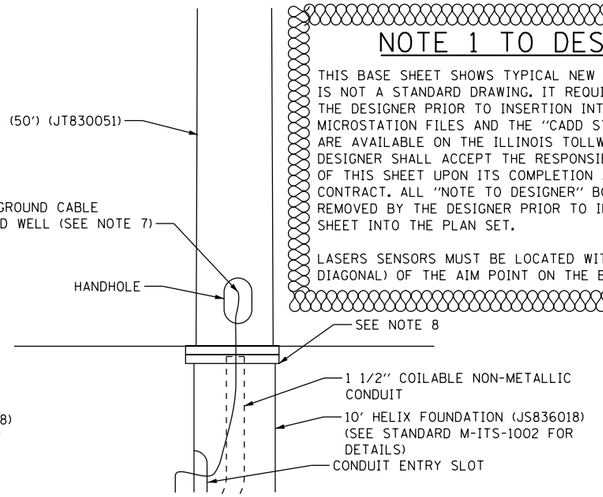


REMOTE SENSOR POLE - SIDE VIEW

## NOTE 1 TO DESIGNER

THIS BASE SHEET SHOWS TYPICAL NEW CONSTRUCTION BUT IT IS NOT A STANDARD DRAWING. IT REQUIRES COMPLETION BY THE DESIGNER PRIOR TO INSERTION INTO A CONTRACT. MICROSTATION FILES AND THE ''CADD STANDARDS MANUAL'' ARE AVAILABLE ON THE ILLINOIS TOLLWAY WEBSITE. THE DESIGNER SHALL ACCEPT THE RESPONSIBILITY OF THE DESIGN OF THIS SHEET UPON ITS COMPLETION AND INSERTION INTO A CONTRACT. ALL ''NOTE TO DESIGNER'' BOXES SHALL BE REMOVED BY THE DESIGNER PRIOR TO INSERTION OF THE SHEET INTO THE PLAN SET.

LASERS SENSORS MUST BE LOCATED WITHIN 50 FEET (ON DIAGONAL) OF THE AIM POINT ON THE BRIDGE DECK SURFACE.

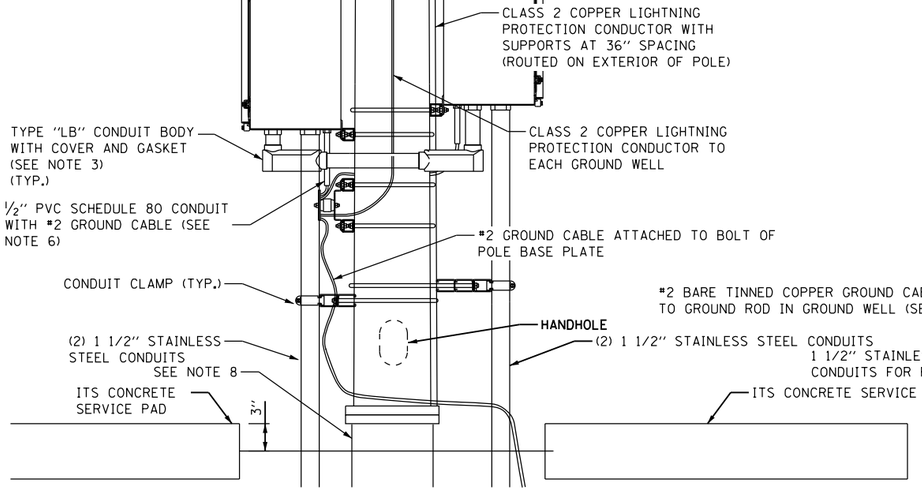


RPU ENCLOSURE - SIDE VIEW

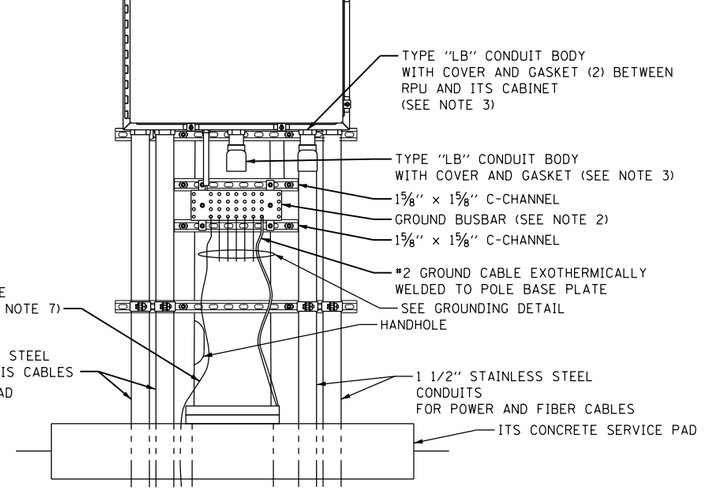


RPU ENCLOSURE - FRONT VIEW

## NOTE 2 TO DESIGNER

FOR BRIDGE MOUNTING APPLICATIONS, THE DESIGNER SHALL DEVELOP STRUCTURAL FOUNDATION AND POLE MOUNTING DETAILS.

M-ITS-1300
SHEET 2 OF 2

Illinois Tollway

RWIS POLE, SENSOR MOUNTING DETAIL

DATE
3-01-2021

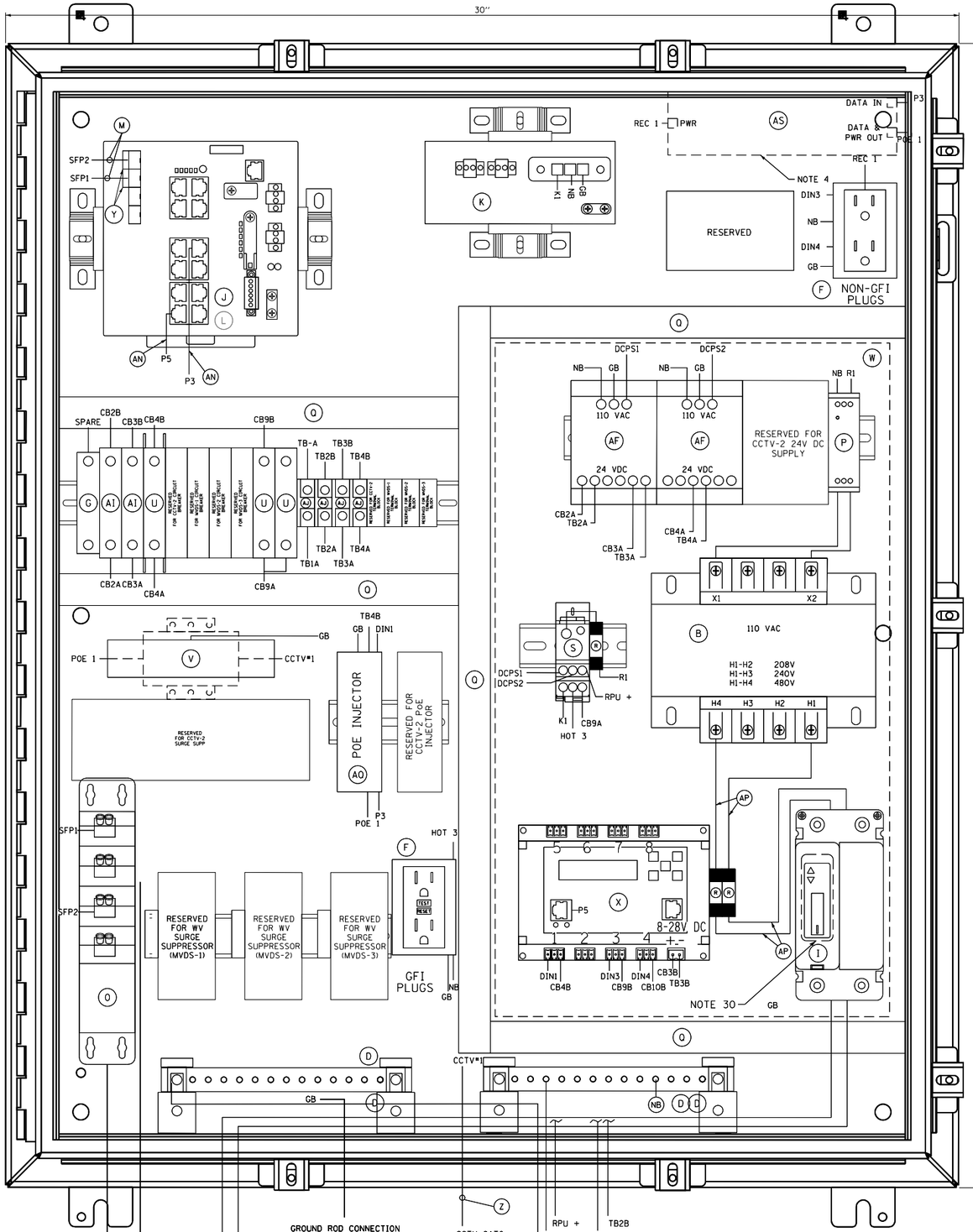


RWIS POLE MOUNTED ITS CABINET WIRING DIAGRAM

ITEM DESCRIPTION

A NOT USED FOR THIS SHEET APPLICATION

B CONTROL POWER TRANSFORMER, 1000VA, 208/240/480-120VAC, 1PH, SQUARE D/CLASS 9070 - T1000 D95

C NOT USED FOR THIS SHEET APPLICATION

D TWO (2) GROUNDING BAR SYSTEM HOFFMAN/PGS2K. BONDED OR SEPARATED AS REQUIRED.

E NEMA 4X STAINLESS STEEL, 36"H X 30"W X 12"D ENCLOSURE WITH 33"X27" PANEL, HOFFMAN/A36H3012SS6LP & A36P30

F TWO DUPLEX 120V RECEPTACLES, ONE GFCI AND NON-GFI (SEE NOTE 9), HUBBELL/GFR5362 & BR20WR

G 24VDC, 1P, 15A CIRCUIT BREAKER, SCHNEIDER ELECTRIC/MGN61510

H NOT USED FOR THIS SHEET APPLICATION

I 480V, 2P, 30A CIRCUIT BREAKER WITH TERMINAL SHIELD, EATON/HFD2030L & 625B229G07

J NETWORK SWITCH CISCO IE-4000-8T4G-E

K CISCO POWER SUPPLY, PWR-IE170W-PC-AC=

L IP SERVICES LICENSE: L-IE4000-RTU=

M NOT USED FOR THIS SHEET APPLICATION

N NOT USED FOR THIS SHEET APPLICATION

O FIBER CONNECTIONS G420U008LAN-XXX-O SMF PATCH PANEL WITH LC CONNECTORS

P 120VAC SURGE SUPPRESSOR, MOUNTED ON DIN RAIL, COOPER CROUSE HINDS/MA15/D/1/SI OR APPROVED EQUAL

Q PANDUIT WIRING DUCT (OR EQUIVALENT), PANDUIT/F1X2LG6 WITH COVER-C1LG6

R 10 AMP FUSE, GOULD (MERSEN)/ATM-10

S SPLICE BLOCK, ALTECH/38041

T NOT USED FOR THIS SHEET APPLICATION

U 5A CIRCUIT BREAKER, ALLEN BRADLEY/1492-SPM1B050

V CAT6 PoE+ SURGE SUPRESSOR: USE AXIS T8061 FOR AXIS PoE CAMERA AND USE DITEK DTK-MRJPOES FOR COHU PoE CAMERA.

W CLEAR POLY METHYL METHACRYLATE (PMMA, PLEXIGLAS) SAFETY COVER ENCOMPASSING ITEMS AF, P, S, R, B, X, & I. (THE INSTALLER SHALL PERMANENTLY AFFIX A LABEL STATING "DANGER 480 VAC" OR "DANGER 240 VAC" OR "DANGER 120 VAC" FOR 120 VAC AS FIELD CONDITIONS WARRANT.)

X POWER CONTROLLER, 8-CHANNEL DIN ETHERNET RELAY, DIGITAL LOGGERS/DIN 4

Y (2) CISCO GLC-LX-SM-RGD = 1 GBPS SM SFP MODULES

Z CATEGORY 6 CABLE, 23 AWG, OUTDOOR RATED CABLE BELDEN/7953A

AA SENSOR SURGE SUPPRESSION, WAVETRONIX - CLICK-200 OR ISS ZONE BARRIER ZB24510

AB NOT USED FOR THIS SHEET APPLICATION

AC NOT USED FOR THIS SHEET APPLICATION

AD NOT USED FOR THIS SHEET APPLICATION

AE RS-232 / RS-485 TO ETHERNET CONVERTOR, WAVETRONIX - CLICK-301 OR ISS-MOXA P5150A, OK-35A

AF AC/DC POWER SUPPLY, 24VDC WAVETRONIX - CLICK-204 OR ISS LAMBDA DSP100-24

AG NOT USED FOR THIS SHEET APPLICATION

AH NOT USED FOR THIS SHEET APPLICATION

AI 2A CIRCUIT BREAKER, ALLEN BRADLEY/1492-SPM1B020

AJ TERMINAL BLOCK, ALLEN BRADLEY/1492-CD8

AK MVDS ASSEMBLY (NOT SHOWN), SEE SPECIAL PROVISIONS WAVETRONIX (SMART SENSOR HDSS-126) OR ISS (SX-300)

AL TRANSFORMER COVERS, SQUARE D/9070FSC2

AM 5-CONDUCTOR JUMPER (Tx, Rx, GND, RTS, CTS), RS-232 SERIAL COMMUNICATIONS (APPLICABLE TO ISS/MOXA)

AN INDOOR/OUTDOOR RATED CAT6 (1000MBS, TEMPERATURE HARDENED) THESE ARE THE CAT6 CABLES ROUTED INSIDE CABINET

AO MVDS CABLE, WAVETRONIX - WX-SS-706-60 OR ISS G4-CBL-60

AP #10 AWG

AQ PoE INJECTOR AXIS T8144 (ONLY REQUIRED FOR PoE CAMERAS)

AR T-BUS CONNECTOR (WAVETRONIX)

AS PoE INJECTOR COHU 7412007-003 (ONLY REQUIRED FOR PoE CAMERAS)

NOTES:

1. ALL POWER WIRING SHALL BE RHH/RHW WITH WIRE TERMINALS OR TINNED.
2. CONTRACTOR TO VERIFY CORRECT TRANSFORMER TAPS ARE USED BASED ON INCOMING POWER SOURCE.
3. ALL CABLES AND EQUIPMENT SHALL BE PROPERLY DRESSED AND LABELED. ALL CONDUITS SHALL BE PROPERLY PLUGGED WITH DUCT SEAL PUTTY (RAINBOW TECHNOLOGIES OR EQUIVALENT).
4. SHEET SHOWS BOTH POE INJECTOR OPTIONS USING A 120VAC SUPPLY AND 24VDC SUPPLY. DEVICES REQUIRED FOR THE 120VAC SUPPLY ARE DENOTED WITH A DASHED LINE.
5. EACH 120VAC OUTLET, PS OR TRANSFORMER (ITEM F, K, L, & AF) SHALL BE FED FROM A SEPARATE INPUT LINE.
6. THE DIN RAIL(S) FOR ITEMS J & K SHALL BE INSTALLED WITH THE CENTER LINE NO LESS THAN 5 INCHES FROM ANY OBSTACLE ABOVE AND NO LESS THAN 4 INCHES FROM ANY OBSTACLE BELOW. ALL DIN RAIL SHALL BE GROUNDED.
7. ALL CABLES INSTALLED WITHIN THE CABINET AND POLE SHALL BE OUTDOOR RATED.
8. WIFI COMMUNCATION SHALL BE DISABLED ON DIN ETHERNET RELAY.
9. THE GFI OUTLETS LOAD SHALL NOT BE CONNECTED TO ANY OTHER LOAD IN THE ENCLOSURE. THE 1900 QUAD BOX GFI'S ARE INTENDED TO BE UTILIZED FOR EXTERNAL EQUIPMENT ONLY. EACH OUTLETS TAB SHALL BE BROKEN SO THEY ARE INDEPENDENT.
10. ALL BREAKERS SHALL BE LABELED (E.G. CAMERA-AC, CAMERA-DC, DIN RELAY-AC, DIN RELAY-DC, CELL MODEM-AC ETC.).
11. NOT USED FOR THIS SHEET APPLICATION.
12. USE THE MOUNTING TABS ON THE IP RELAY UNIT TO MOUNT THE UNIT DIRECTLY TO THE BACK PLATE. REFER TO THE IP RELAY WIRING TABLE FOR WIRING DETAILS.
13. ALL CABLES SHALL ENTER THE ENCLOSURE FROM THE BOTTOM. ALL POWER AND COMMUNICATION CABLE SLACK SHALL BE PLACED IN THE HANDHOLE.
14. POWER FEED TO THE CISCO IE4000 SWITCH SHALL BE FROM THE 120VAC INPUT WHEN THE ENCLOSURE IS AC POWERED.
15. NOT USED FOR THIS SHEET APPLICATION.
16. IF A SOLAR GENERATOR IS CONNECTED, THEN ITEM P AND THE SECONDARY SIDE OF ITEM B SHALL BE CONNECTED UNTIL A FINAL AC CONNECTION IS MADE.
17. ITEM X IS USED TO CONTROL POWER TO THE CAMERAS AND DETECTORS. ALL 120VAC CONNECTIONS ON ITEM X SHALL BE PROTECTED.
18. CABLES TO BE ROUTED THROUGH POLE.
19. WHEN A 24VDC TO 120VAC POWER GENERATOR IS CONNECTED, THEN THE 480VAC TO 120VAC STEP DOWN TRANSFORMER IS BYPASSED.
20. NOT USED FOR THIS SHEET APPLICATION.
21. NOT USED FOR THIS SHEET APPLICATION.
22. DIN RAIL SHALL BE INSTALLED AS ILLUSTRATED ON DRAWING. DIN RAIL SHALL BE GROUNDED TO THE GROUND BUS.
23. BOND NEUTRAL AND GROUND BUSES TOGETHER, WHEN REQUIRED. TIE THE ENCLOSURE INTO THE GROUND BUS.
24. ITEM W SHALL BE FORMED AND MOLDED TO FIT AROUND THE AREA DENOTED BY THE DASHED LINE. THE PLEXIGLASS SHALL BE MOUNTED TO THE BACKPLATE WITH SUFFICIENT AIR HOLES TO ALLOW HEAT TO ESCAPE THE AREA. THERE SHALL ALSO BE OPENINGS ON THE BOTTOM TO ALLOW CABLES TO BE PASSED FROM THE AC SECTION TO THE OTHER SECTIONS OF THE ENCLOSURE.
25. ITEM AL SHALL BE PLACED ON ITEM B.
26. ALL INTERNAL ENCLOSURE ROUTED AND TERMINATED CAT6 CABLE SHALL BE TEMPERATURE RATED.
27. ALL INTERNAL 24VAC, 120VAC (STARTING ON SECONDARY SIDE OF ITEM B) AND ANY DC VOLTAGE POWER FEEDS USE #16 AWG CABLE.
28. SPARE BREAKER RESERVED.
29. ALL CONDUIT EXITING THE BOTTOM OF THE CABINET SHALL BE INSTALL IN-LINE WITH THE EQUIPMENT IT IS CONNECTED TO. THE CABLES SHALL BE INSTALLED IN A NEAT AND PROFESSIONAL MANNER.
30. PROVIDE WINDOW IN PMMA SHIELD FOR ACCESS TO BREAKER. MOUNT BREAKER FLUSH WITH PMMA SHIELD USING MOUNTING BRACKET.

NOTE TO DESIGNER:
THIS BASE SHEET SHOWS TYPICAL NEW CONSTRUCTION BUT IT IS NOT A STANDARD DRAWING. IT REQUIRES COMPLETION BY THE DESIGNER PRIOR TO INSERTION INTO A CONTRACT. MICROSTATION FILES AND THE "CADD STANDARDS MANUAL" ARE AVAILABLE ON THE ILLINOIS TOLLWAY WEBSITE. THE DESIGNER SHALL ACCEPT THE RESPONSIBILITY OF THE DESIGN OF THIS SHEET UPON ITS COMPLETION AND INSERTION INTO A CONTRACT. ALL "NOTE TO DESIGNER" BOXES SHALL BE REMOVED PRIOR TO INSERTION OF THE DRAWING INTO THE PLAN SET.

DSE SHALL SPECIFY THE GATOR PATCH CABLE LENGTH PER SITE AND UPDATE ITEM (O) TO INCLUDE THIS LENGTH.

IF THERE IS NO CCTV CAMERA THE DESIGNER SHALL TURN OFF THE "CCTV - 1" LEVEL AND TURN ON THE "CCTV - 1 - RESERVED TEXT LEVEL" IN THE DISPLAY LEVEL MANAGER.

M-ITS-1301
SHEET 1 OF 2

Illinois Tollway

RWIS CABINET WIRING DIAGRAM

DATE
3-01-2020

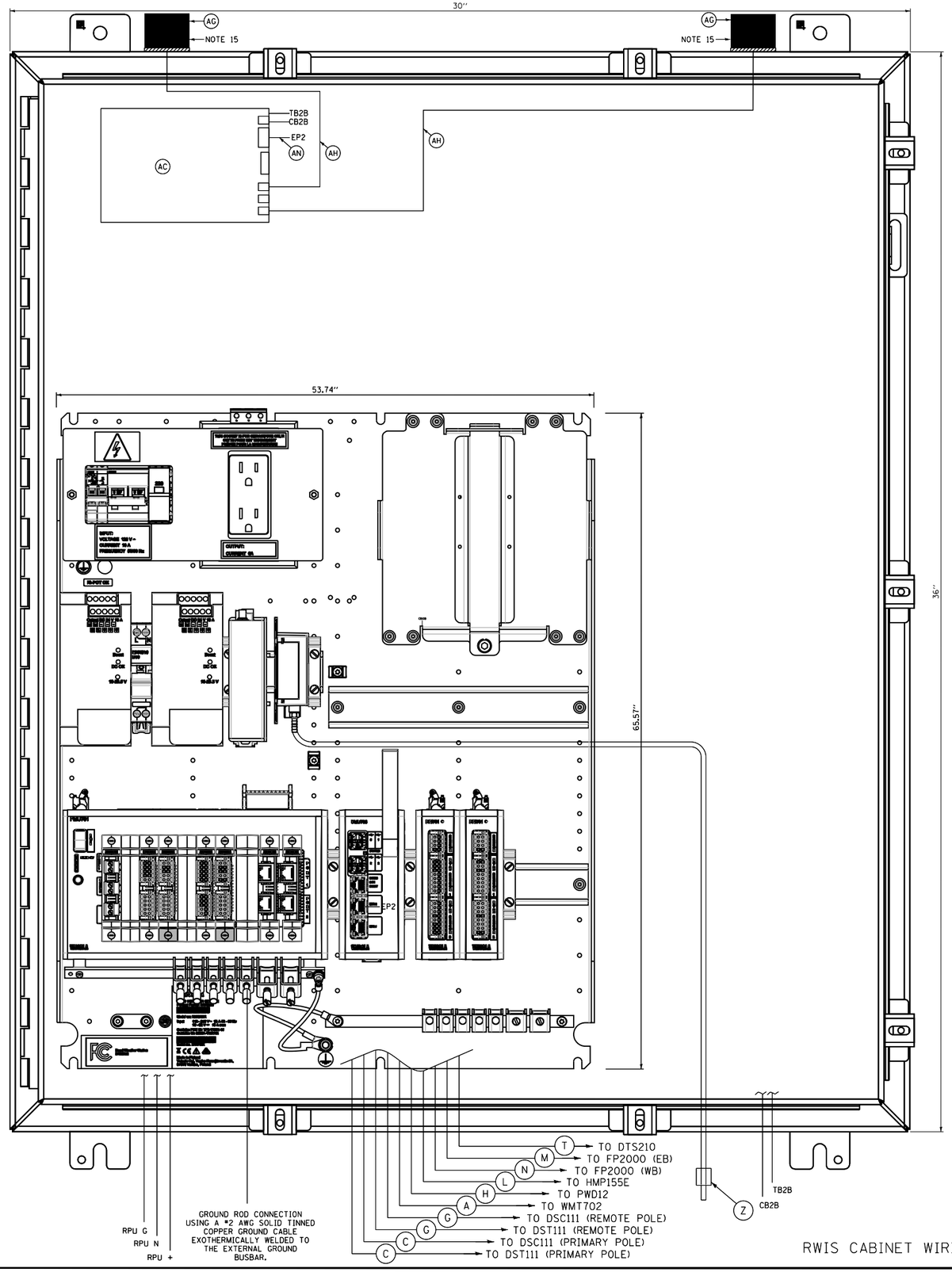


RWIS CABINET WIRING DIAGRAM

| ITEM | DESCRIPTION |
|---|---|
| A | WMT700 CABLE, VAISALA 237890 |
| B | NOT USED FOR THIS SHEET APPLICATION |
| C | DSC11/DST111 CABLE (PRIMARY POLE), VAISALA 216547 |
| D | NOT USED FOR THIS SHEET APPLICATION |
| E | NEMA 4X STAINLESS STEEL, 36"H X 30"W X 12"D ENCLOSURE WITH 33"X27" PANEL, HOFFMAN/A36H3012SS6LP & A36P30 |
| F | NOT USED FOR THIS SHEET APPLICATION |
| G | DSC11/DST111 CABLE (REMOTE POLE), VAISALA DR22174Z150M |
| H | PWD12 CABLE, VAISALA 217148 |
| I | NOT USED FOR THIS SHEET APPLICATION |
| J | NOT USED FOR THIS SHEET APPLICATION |
| K | NOT USED FOR THIS SHEET APPLICATION |
| L | HMP155E CABLE, VAISALA 220497 |
| M | FP2000 TYPE IIA CABLE (EB SENSOR), VAISALA 76420300 |
| N | FP2000 TYPE IIA CABLE (WB SENSOR), VAISALA 76421500 (FOR SENSORS GREATER THAN 500' FROM RWIS ENCLOSURE USE TYPE V CABLE, VAISALA 76420500) |
| O | NOT USED FOR THIS SHEET APPLICATION |
| P | NOT USED FOR THIS SHEET APPLICATION |
| Q | NOT USED FOR THIS SHEET APPLICATION |
| R | NOT USED FOR THIS SHEET APPLICATION |
| S | NOT USED FOR THIS SHEET APPLICATION |
| T | DTS210 CABLE (20 METERS), VAISALA |
| U | NOT USED FOR THIS SHEET APPLICATION |
| V | NOT USED FOR THIS SHEET APPLICATION |
| W | NOT USED FOR THIS SHEET APPLICATION |
| X | DMU703 CABLE, VAISALA 210267 |
| Y | NOT USED FOR THIS SHEET APPLICATION |
| Z | PRESSURE PORT, VAISALA 16941DM |
| AA | NOT USED FOR THIS SHEET APPLICATION |
| AB | NOT USED FOR THIS SHEET APPLICATION |
| AC | CDMA MODEM ASSEMBLY (FOR VERIZON NETWORK) |
| AD | NOT USED FOR THIS SHEET APPLICATION |
| AE | NOT USED FOR THIS SHEET APPLICATION |
| AF | NOT USED FOR THIS SHEET APPLICATION |
| AG | WIRELESS MODEM ANTENNAS, PCTEL/BMLPVDB700/2500 |
| AH | WIRELESS MODEM ANTENNA CABLE, WITH SMA CONNECTORS PCTEL/PROFLEX PLUS 195-RG58/U |
| AI | NOT USED FOR THIS SHEET APPLICATION |
| AJ | NOT USED FOR THIS SHEET APPLICATION |
| AK | NOT USED FOR THIS SHEET APPLICATION |
| AL | NOT USED FOR THIS SHEET APPLICATION |
| AM | NOT USED FOR THIS SHEET APPLICATION |
| AN | INDOOR/OUTDOOR RATED CAT6 (1000MBS, TEMPERATURE HARDENED) THESE ARE THE CAT6 CABLES ROUTED INSIDE CABINET |

NOTES:

1. ALL POWER WIRING SHALL BE RHH/RHW WITH WIRE TERMINALS OR TINNED.
2. NOT USED FOR THIS SHEET APPLICATION
3. ALL CABLES AND EQUIPMENT SHALL BE PROPERLY DRESSED AND LABELED. ALL CONDUITS SHALL BE PROPERLY PLUGGED WITH DUCT SEAL PUTTY (RAINBOW TECHNOLOGIES OR EQUIVALENT).
4. NOT USED FOR THIS SHEET APPLICATION
5. NOT USED FOR THIS SHEET APPLICATION
6. NOT USED FOR THIS SHEET APPLICATION
7. NOT USED FOR THIS SHEET APPLICATION
8. NOT USED FOR THIS SHEET APPLICATION
9. NOT USED FOR THIS SHEET APPLICATION
10. NOT USED FOR THIS SHEET APPLICATION
11. NOT USED FOR THIS SHEET APPLICATION
12. NOT USED FOR THIS SHEET APPLICATION
13. ALL CABLES SHALL ENTER THE ENCLOSURE FROM THE BOTTOM. ALL POWER AND COMMUNICATION CABLE SLACK SHALL BE PLACED IN THE HANDHOLE.
14. NOT USED FOR THIS SHEET APPLICATION
15. THE CELL MODEM ANTENNAS SHALL BE PROPERLY SEALED WITH HIGH DENSITY NEOPRENE GASKETS RATED FOR HIGH TEMPERATRURE TO PREVENT WATER PENETRATION INTO THE CABINET.
16. NOT USED FOR THIS SHEET APPLICATION
17. NOT USED FOR THIS SHEET APPLICATION
18. NOT USED FOR THIS SHEET APPLICATION
19. NOT USED FOR THIS SHEET APPLICATION
20. NOT USED FOR THIS SHEET APPLICATION
21. NOT USED FOR THIS SHEET APPLICATION
22. NOT USED FOR THIS SHEET APPLICATION
23. BOND NEUTRAL AND GROUND BUSES TOGETHER, WHEN REQUIRED. TIE THE ENCLOSURE INTO THE GROUND BUS.
24. NOT USED FOR THIS SHEET APPLICATION
25. NOT USED FOR THIS SHEET APPLICATION
26. ALL INTERNAL ENCLOSURE ROUTED AND TERMINATED CAT6 CABLE SHALL BE TEMPERATURE RATED.
27. NOT USED FOR THIS SHEET APPLICATION
28. NOT USED FOR THIS SHEET APPLICATION
29. ALL CONDUIT EXITING THE BOTTOM OF THE CABINET SHALL BE INSTALL IN-LINE WITH THE EQUIPMENT IT IS CONNECTED TO. THE CABLES SHALL BE INSTALLED IN A NEAT AND PROFESSIONAL MANNER.

## NOTE TO DESIGNER

THIS BASE SHEET SHOWS TYPICAL NEW CONSTRUCTION BUT IT IS NOT A STANDARD DRAWING. IT REQUIRES COMPLETION BY THE DESIGNER PRIOR TO INSERTION INTO A CONTRACT. MICROSTATION FILES AND THE "CADD STANDARDS MANUAL" ARE AVAILABLE ON THE ILLINOIS TOLLWAY WEBSITE. THE DESIGNER SHALL ACCEPT THE RESPONSIBILITY OF THE DESIGN OF THIS SHEET UPON ITS COMPLETION AND INSERTION INTO A CONTRACT. ALL "NOTE TO DESIGNER" BOXES SHALL BE REMOVED PRIOR TO INSERTION OF THE DRAWING INTO THE PLAN SET.

DSE SHALL SPECIFY THE GATOR PATCH CABLE LENGTH PER SITE AND UPDATE ITEM (O) TO INCLUDE THIS LENGTH.



0 2" 4"
HORIZONTAL 1"=2" SCALES IN INCHES

## NOTE TO DESIGNER

IF THERE IS NO CCTV CAMERA THE DESIGNER SHALL TURN OFF THE "CCTV - 1" LEVEL AND TURN ON THE "CCTV - 1 - RESERVED TEXT LEVEL" IN THE DISPLAY LEVEL MANAGER.

Illinois Tollway

RWIS CABINET WIRING DIAGRAM

DATE
3-01-2020

ITS DISCONNECT SWITCH ASSEMBLY

HEAVY-DUTY HANDHOLE (COMM) (JS814020)

SUB-SURFACE TEMPERATURE SENSOR INSTALLED 18" BELOW GRADE

1 1/2" CNC FOR SUB-SURFACE TEMPERATURE SENSOR CABLE

1¼" CNC FOR PASSIVE PAVEMENT SENSOR CABLE

SENSOR CABLE INSTALLED IN SAWCUT AND SEALED WITH WATERTIGHT EPOXY PER RWIS MANUFACTURER'S RECOMMENDATIONS

RWIS POLE (50') (JT830051) (PRIMARY POLE)

CORE HOLE FOR PASSIVE PAVEMENT SENSOR CABLE

HEAVY-DUTY HANDHOLE (ELEC) (JS814020)

PASSIVE PAVEMENT SENSOR EMBEDDED IN ROAD SURFACE

4'x4'x6" CONCRETE SERVICE PAD

1 1/2" CNC IN 4" PVC OR CNC SLEEVE FOR PASSIVE PAVEMENT SENSOR CABLE AND REMOTE SENSOR CABLES

POLE MOUNTED ITS ENCLOSURE

2.5'

ROADWAY

GUARDRAIL

(2) 1 1/2" CNC FOR SENSOR CABLES

JOINT BETWEEN ROADWAY AND APPROACH SLAB

GROUND WELL (TYP.)

APPROACH SLAB

MEDIAN BARRIER WALL

#2 BARE TINNED COPPER GROUND CABLE (TYP.)

RPU ENCLOSURE

NON INTRUSIVE ROAD SURFACE TEMPERATURE SENSOR. AIMING LINE AT WHEEL TRACK. (40' MAX DIAGONAL DISTANCE FROM SENSOR TO PAVEMENT TARGET)

4'x4'x6" CONCRETE SERVICE PAD

1 1/2" CNC FOR POWER CABLES

BRIDGE DECK

TRAFFIC FLOW

JOINT BETWEEN APPROACH SLAB AND BRIDGE DECK

PARAPET WALL

5'

2.5'

1 1/2" CNC FOR 12 STRAND, FOC PIGTAIL

COMM HANDHOLE (JT160130)

OUTSIDE SHOULDER | LANE 3 | LANE 2 | LANE 1 | INSIDE SHOULDER

MATCHLINE (SEE SHEET M-ITS-1302 SHEET 2)

## NOTE 1 TO DESIGNER

THIS BASE SHEET SHOWS TYPICAL NEW CONSTRUCTION BUT IT IS NOT A STANDARD DRAWING. IT REQUIRES COMPLETION BY THE DESIGNER PRIOR TO INSERTION INTO A CONTRACT. MICROSTATION FILES AND THE "CADD STANDARDS MANUAL" ARE AVAILABLE ON THE ILLINOIS TOLLWAY WEBSITE. THE DESIGNER SHALL ACCEPT THE RESPONSIBILITY OF THE DESIGN OF THIS SHEET UPON ITS COMPLETION AND INSERTION INTO A CONTRACT. ALL "NOTE TO DESIGNER" BOXES SHALL BE REMOVED BY THE DESIGNER PRIOR TO INSERTION OF THE SHEET INTO THE PLAN SET.

LASERS SENSORS MUST BE LOCATED WITHIN 50 FEET (ON DIAGONAL) OF THE AIM POINT ON THE BRIDGE DECK SURFACE.

## NOTE 2 TO DESIGNER

THE DESIGNER SHALL COMPLETE THE COMPONENT REQUIREMENTS TABLE AS REQUIRED TO INDICATE WHICH COMPONENTS ARE TO BE INSTALLED ON EACH POLE MOUNTED ITS ASSEMBLY. DESIGNER TO EXPAND CHART AS NECESSARY.

## NOTE 3 TO DESIGNER

ENSURE THE DIRECTION OF TRAFFIC FLOW AND THE ORIENTATION OF THE BRIDGE DECK AND THE ROADWAY PAVEMENT ARE CORRECT FOR THE PROJECT SPECIFIC SITE. ENSURE THE NON-INTRUSIVE SENSORS POINT TO THE BRIDGE DECK AND THAT THE IN-PAVEMENT SENSOR IS IN THE ROADWAY PAVEMENT. ENSURE THE SLOPE ON THE BRIDGE SHOULDER ALLOWS THE POLE TO BE PLACED WITHIN 40 FEET HORIZONTAL OF THE BRIDGE DECK.

## NOTE 4 TO DESIGNER

DSE TO ENSURE THE THE RWIS POLE IS LOCATED WITHIN SENSORS MAXIMUM DISTANCE (HATCHED AREA).

## NOTE 5 TO DESIGNER

IN THE EVENT THE PRIMARY POLE AND SECONDARY POLES CANNOT BE INSTALLED WITHIN THE 40 FOOT MAXIMUM RADIUS OF THE BRIDGE DECK, THE DESIGNER SHALL CONSULT WITH THE ILLINOIS TOLLWAY AND GEC ON AN ALTERNATE PLACEMENT SOLUTION.

## NOTE 6 TO DESIGNER

INSTALLATION OF THE PRIMARY POLE AND SECONDARY POLE FOR BRIDGE INSTALLATION: POLES TO BE INSTALLED NEAR IMMEDIATE ENTRANCE OF THE BRIDGE SO THE NON-INVASIVE LASER TEMPERATURE SENSOR CAN MONITOR BRIDGE DECK TEMPERATURE AND ALSO THE BRIDGE APPROACH OR DEPARTURE.

M-ITS-1302

Illinois Tollway

# TYPICAL RWIS SITE INSTALLATION PLAN (SHEET 1 OF 2)

DATE
3-01-2021

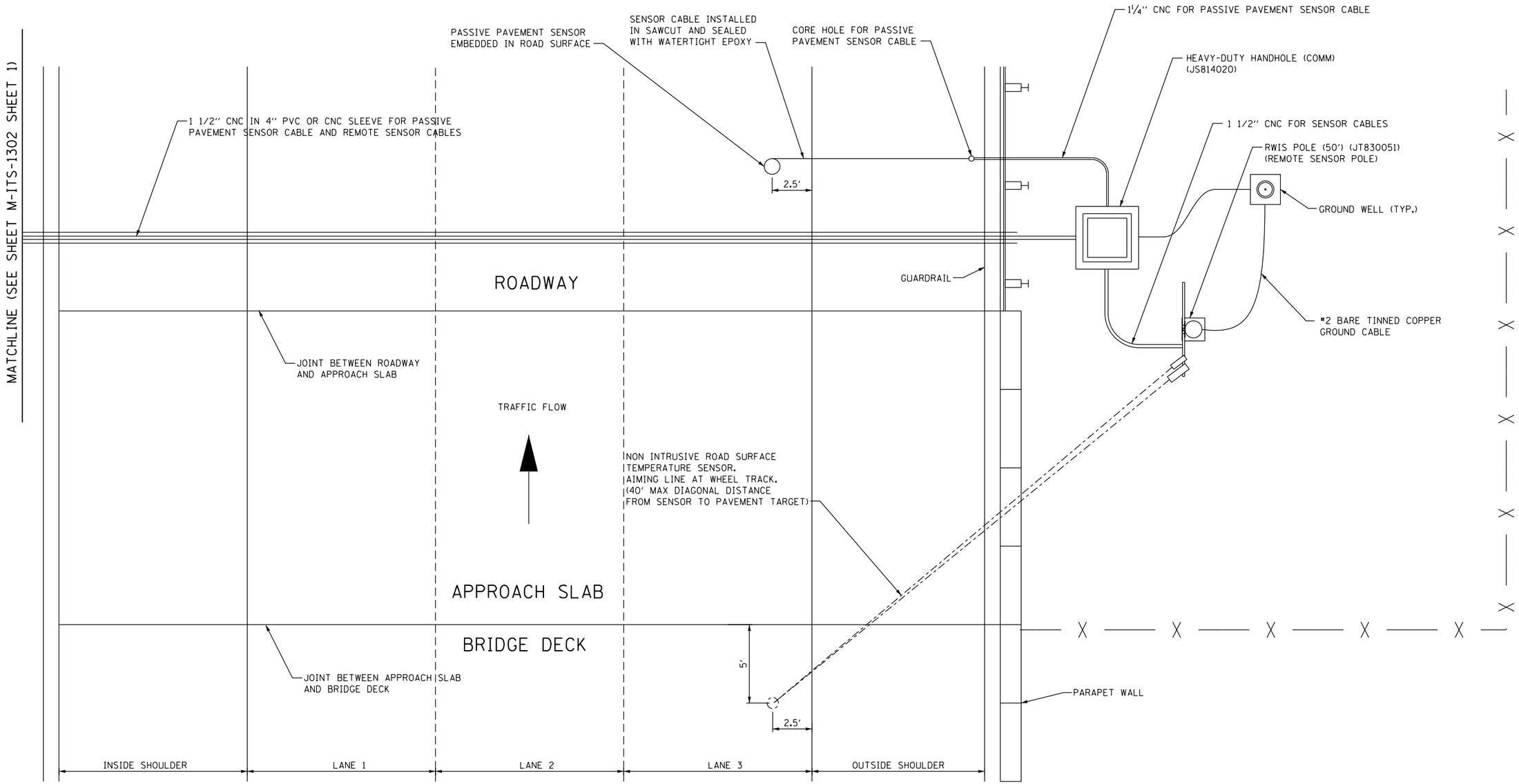


## NOTE 1 TO DESIGNER

THIS BASE SHEET SHOWS TYPICAL NEW CONSTRUCTION BUT IT IS NOT A STANDARD DRAWING. IT REQUIRES COMPLETION BY THE DESIGNER PRIOR TO INSERTION INTO A CONTRACT. MICROSTATION FILES AND THE "CADD STANDARDS MANUAL" ARE AVAILABLE ON THE ILLINOIS TOLLWAY WEBSITE. THE DESIGNER SHALL ACCEPT THE RESPONSIBILITY OF THE DESIGN OF THIS SHEET UPON ITS COMPLETION AND INSERTION INTO A CONTRACT. ALL "NOTE TO DESIGNER" BOXES SHALL BE REMOVED BY THE DESIGNER PRIOR TO INSERTION OF THE SHEET INTO THE PLAN SET.

LASERS SENSORS MUST BE LOCATED WITHIN 50 FEET (ON DIAGONAL) OF THE AIM POINT ON THE BRIDGE DECK SURFACE.

## NOTE 2 TO DESIGNER

THE DESIGNER SHALL COMPLETE THE COMPONENT REQUIREMENTS TABLE AS REQUIRED TO INDICATE WHICH COMPONENTS ARE TO BE INSTALLED ON EACH POLE MOUNTED ITS ASSEMBLY. DESIGNER TO EXPAND CHART AS NECESSARY.

## NOTE 3 TO DESIGNER

ENSURE THE DIRECTION OF TRAFFIC FLOW AND THE ORIENTATION OF THE BRIDGE DECK AND THE ROADWAY PAVEMENT ARE CORRECT FOR THE PROJECT SPECIFIC SITE. ENSURE THE NON-INTRUSIVE SENSORS POINT TO THE BRIDGE DECK AND THAT THE IN-PAVEMENT SENSOR IS IN THE ROADWAY PAVEMENT. ENSURE THE SLOPE ON THE BRIDGE SHOULDER ALLOWS THE POLE TO BE PLACED WITHIN 40 FEET HORIZONTAL OF THE BRIDGE DECK.

## NOTE 4 TO DESIGNER

DSE TO ENSURE THE THE RWIS POLE IS LOCATED WITHIN SENSORS MAXIMUM DISTANCE (HATCHED AREA).

## NOTE 5 TO DESIGNER

IN THE EVENT THE PRIMARY POLE AND SECONDARY POLES CANNOT BE INSTALLED WITHIN THE 40 FOOT MAXIMUM RADIUS OF THE BRIDGE DECK, THE DESIGNER SHALL CONSULT WITH THE ILLINOIS TOLLWAY AND GEC ON AN ALTERNATE PLACEMENT SOLUTION.

## NOTE 6 TO DESIGNER

INSTALLATION OF THE PRIMARY POLE AND SECONDARY POLE FOR BRIDGE INSTALLATION: POLES TO BE INSTALLED NEAR IMMEDIATE ENTRANCE OF THE BRIDGE SO THE NON-INVASIVE LASER TEMPERATURE SENSOR CAN MONITOR BRIDGE DECK TEMPERATURE AND ALSO THE BRIDGE APPROACH OR DEPARTURE.

M-ITS-1302

Illinois Tollway

TYPICAL RWIS SITE INSTALLATION PLAN (SHEET 2 OF 2)

DATE
3-01-2021

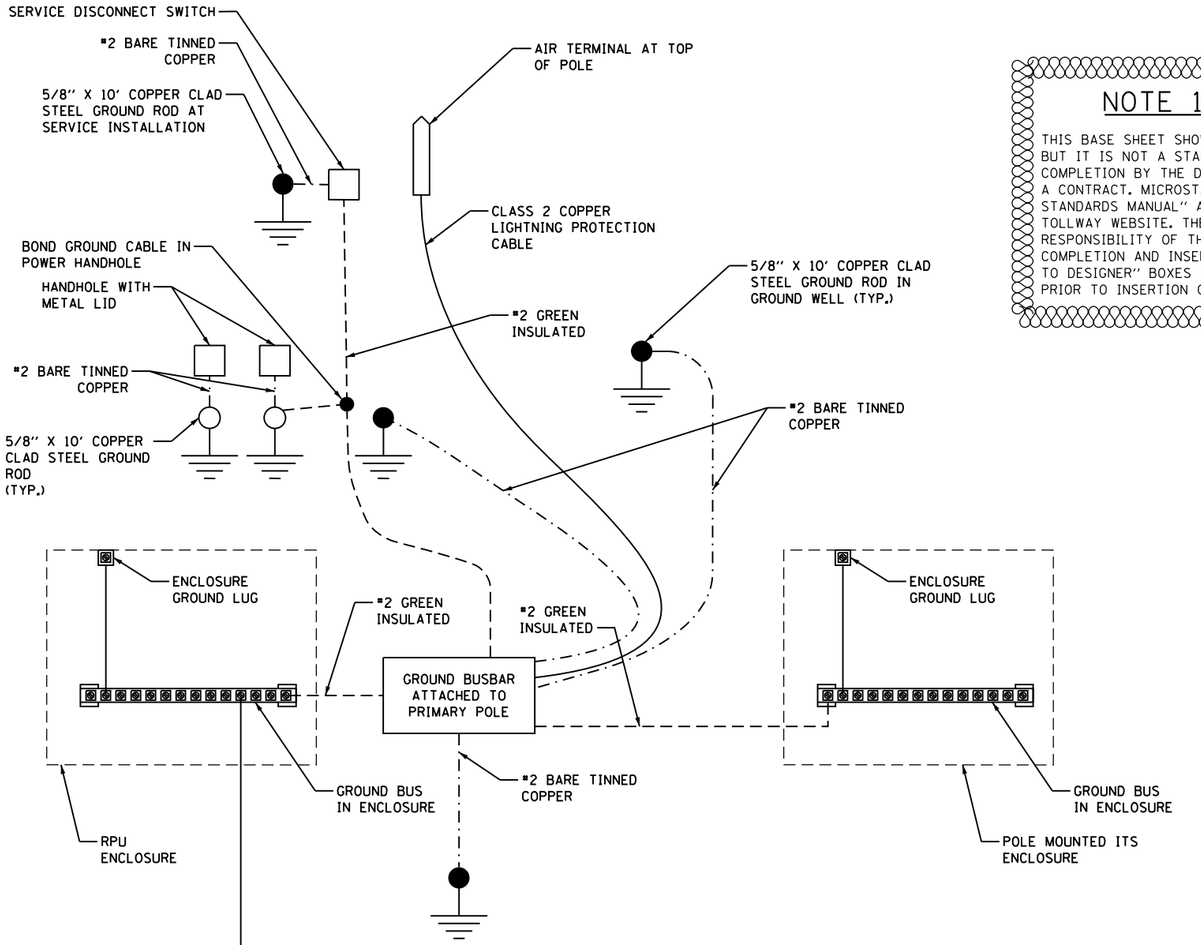


## NOTE 1 TO DESIGNER

THIS BASE SHEET SHOWS TYPICAL NEW CONSTRUCTION BUT IT IS NOT A STANDARD DRAWING. IT REQUIRES COMPLETION BY THE DESIGNER PRIOR TO INSERTION INTO A CONTRACT. MICROSTATION FILES AND THE "CADD STANDARDS MANUAL" ARE AVAILABLE ON THE ILLINOIS TOLLWAY WEBSITE. THE DESIGNER SHALL ACCEPT THE RESPONSIBILITY OF THE DESIGN OF THIS SHEET UPON ITS COMPLETION AND INSERTION INTO A CONTRACT. ALL "NOTE TO DESIGNER" BOXES SHALL BE REMOVED BY THE DESIGNER PRIOR TO INSERTION OF THE SHEET INTO THE PLAN SET.

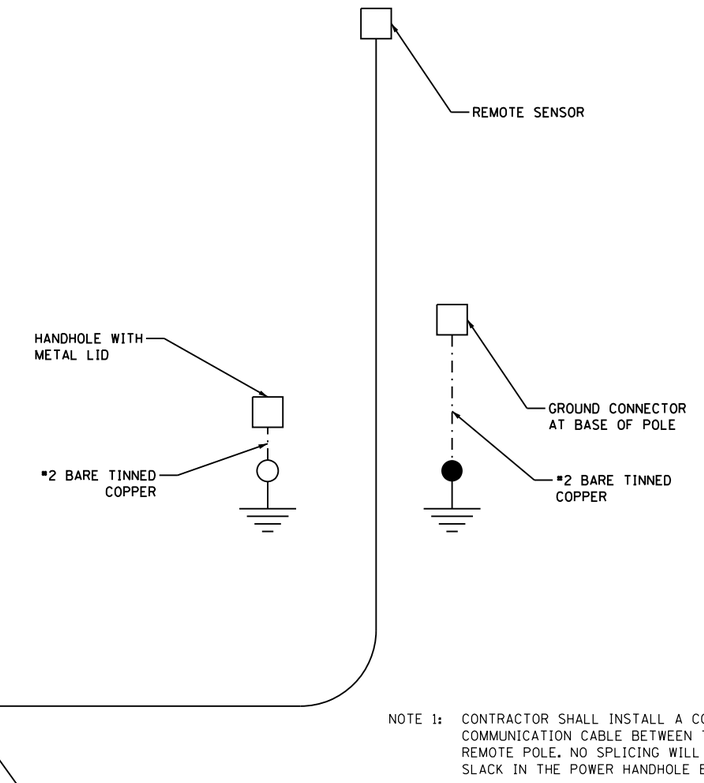


NOTE 1: CONTRACTOR SHALL INSTALL A CONTINUOUS RUN FOR THE POWER AND COMMUNICATION CABLE BETWEEN THE PRIMARY RWIS AND SECONDARY REMOTE POLE. NO SPLICING WILL BE ALLOWED. INSTALL 40 FEET OF SLACK IN THE POWER HANDHOLE BETWEEN THE TWO POLES.

RPU POLE

REMOTE POLE

M-ITS-1303
SHEET 1 OF 1

Illinois Tollway

TYPICAL RWIS GROUNDING SCHEMATIC

DATE
3-01-2020